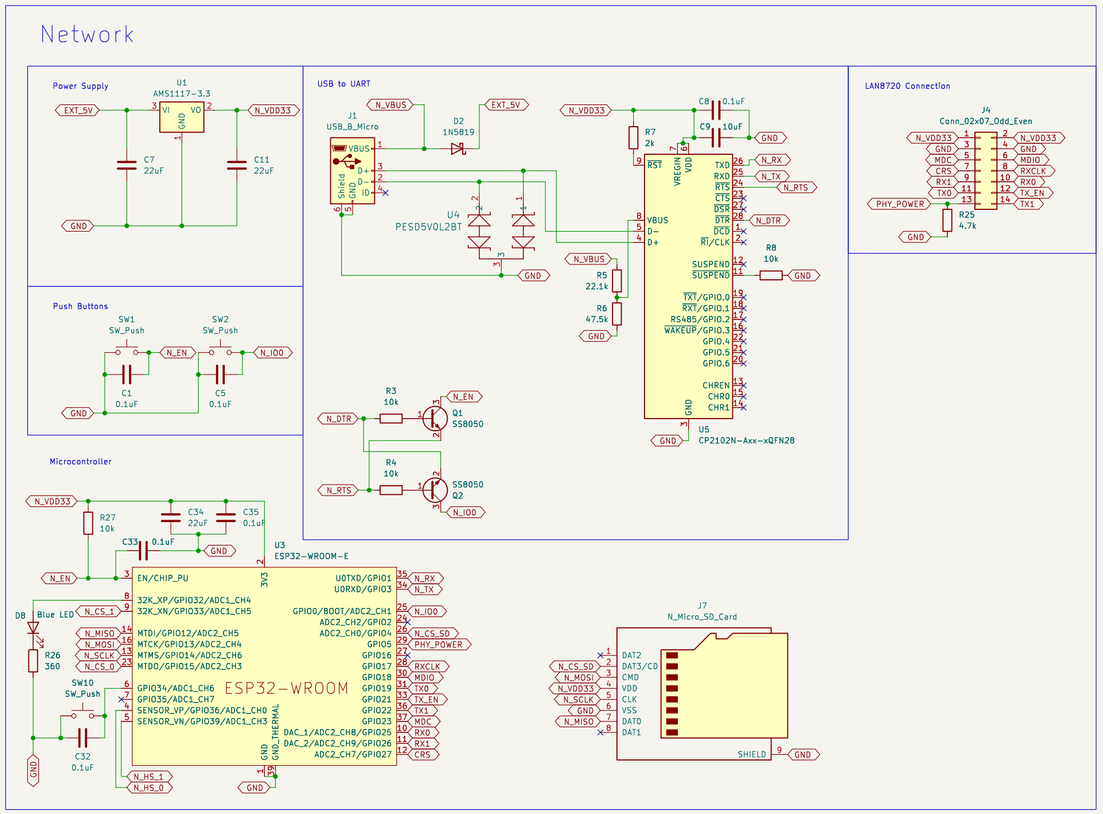

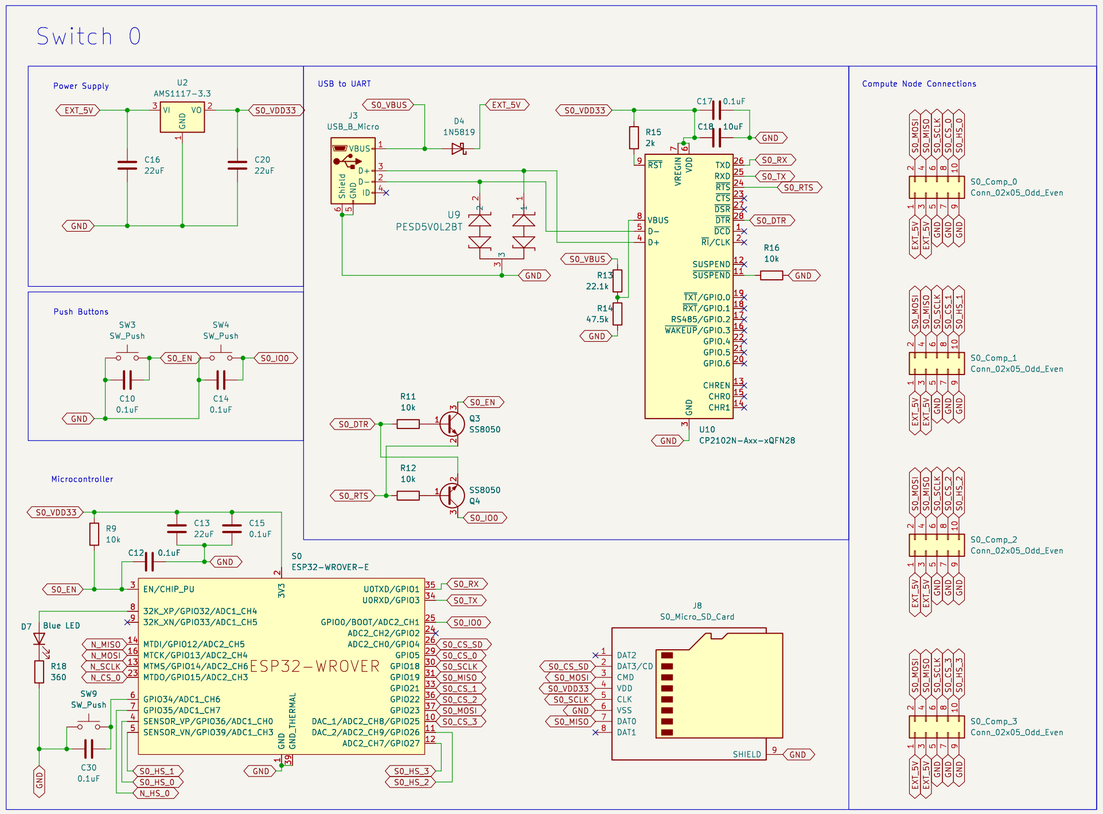

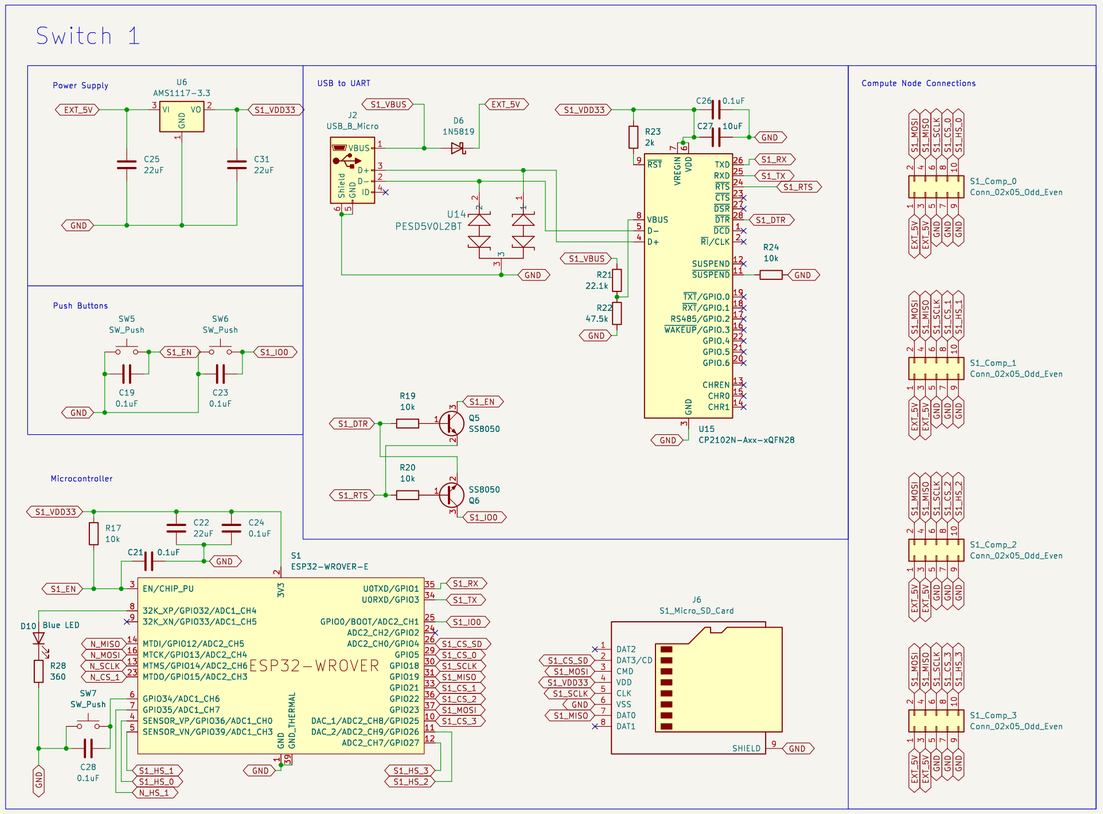

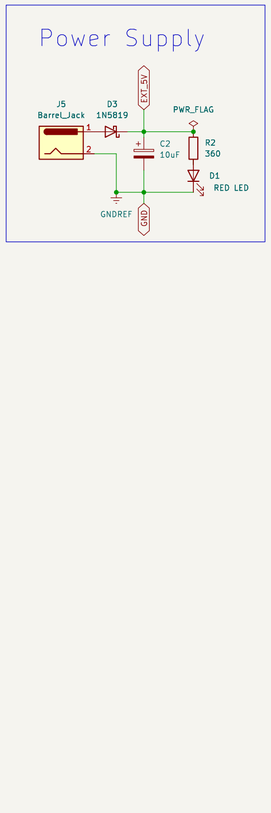

Designed by Team 20
Serial No. BNCCMBM

Purdue University – ECE49022 Spring 2025

Sheet: /
File: Network_and_Switch.kicad_sch

Title: BoilerNet Compute Cluster – MicroUSB Compute Cluster Motherboard

Size: A2	Date: 02/16/2025	Rev:
KiCad E.D.A. 9.0.0		Id: 1/1