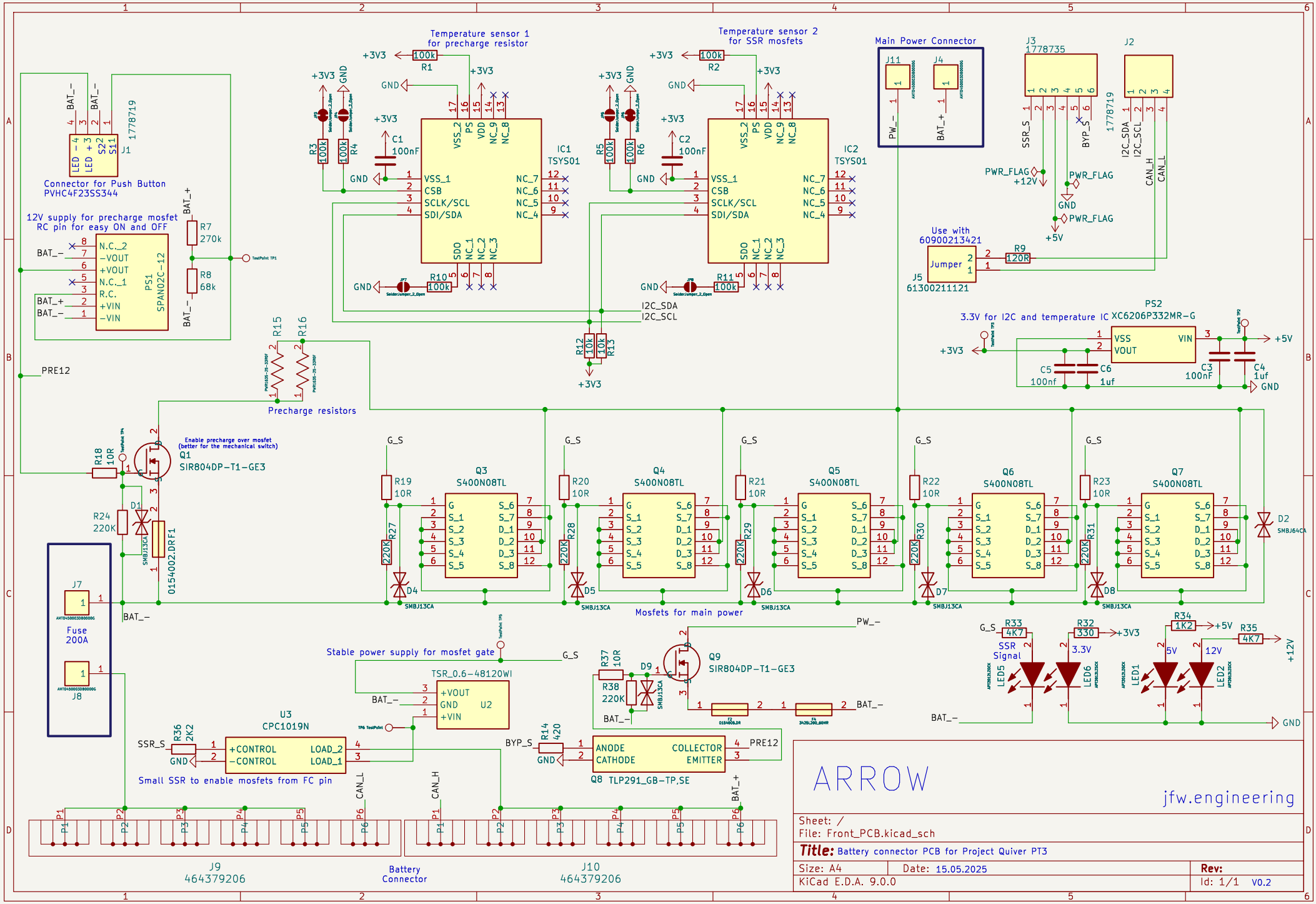
Temperature sensor 1
for precharge resistor
Temperature sensor 2
for SSR mosfets
Main Power Connector
Connector for Push Button
PVHC4F23SS344
12V supply for precharge mosfet
RC pin for easy ON and OFF
Use with
60900213421
3.3V for I2C and temperature IC XC6206P332MR-G
Precharge resistors
Enable precharge over mosfet
(better for the mechanical switch)
Mosfets for main power
Stable power supply for mosfet gate
Small SSR to enable mosfets from FC pin
Battery
Connector
Fuse
200A
SSR
Signal
3.3V
5V
12V
ARROW
jfw.engineering
Sheet: /
File: Front_PCB.kicad_sch
Title: Battery connector PCB for Project Quiver PT3
Size: A4
Date: 15.05.2025
Rev:
KiCad E.D.A. 9.0.0
Id: 1/1
V0.2