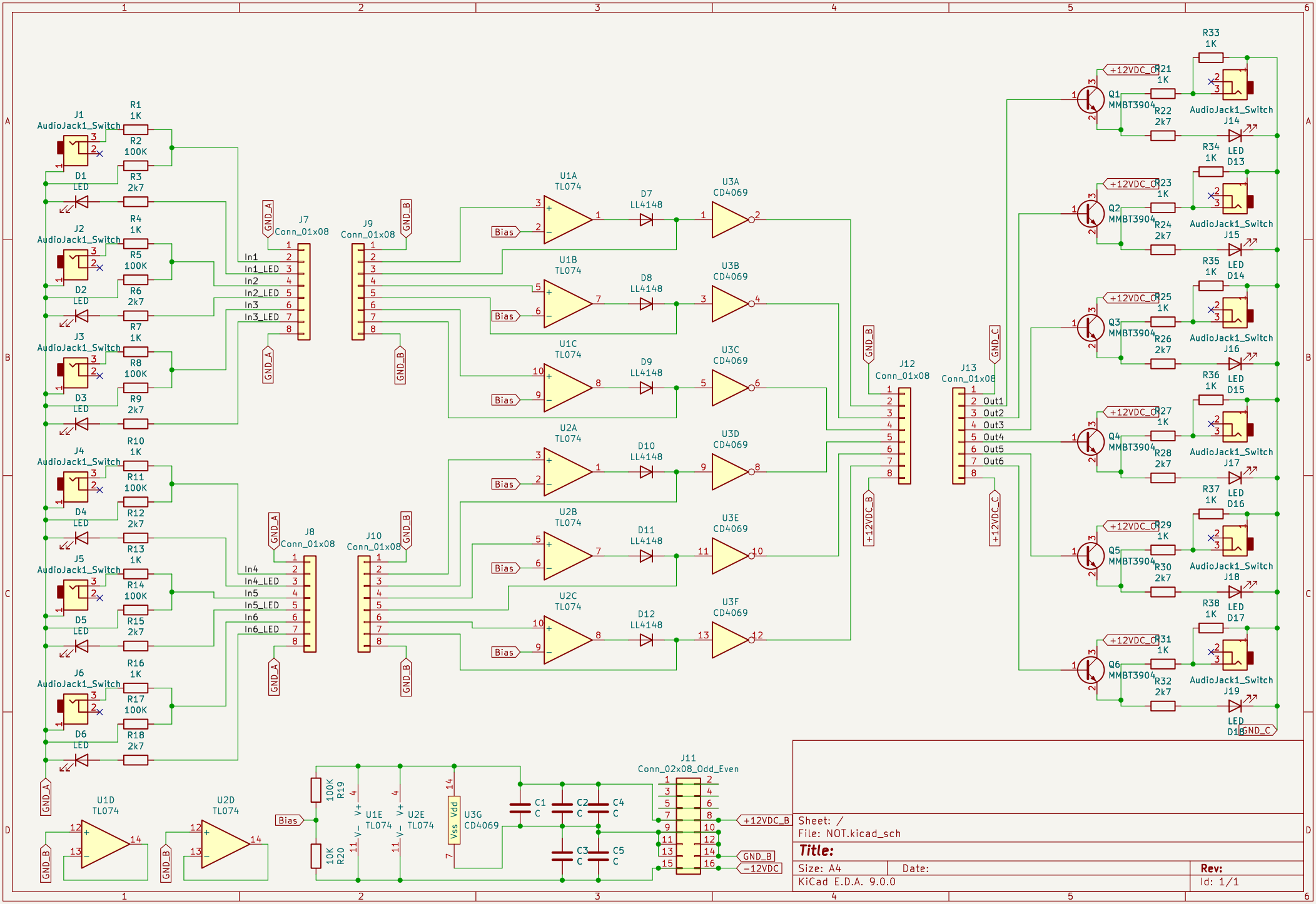
J1 AudioJack1_Switch
J2 AudioJack1_Switch
J3 AudioJack1_Switch
J4 AudioJack1_Switch
J5 AudioJack1_Switch
J6 AudioJack1_Switch
R1 1K
R2 100K
R3 2k7
R4 1K
R5 100K
R6 2k7
R7 1K
R8 100K
R9 2k7
R10 1K
R11 100K
R12 2k7
R13 1K
R14 100K
R15 2k7
R16 1K
R17 100K
R18 2k7
D1 LED
D2 LED
D3 LED
D4 LED
D5 LED
D6 LED
J7 Conn_01x08
J8 Conn_01x08
J9 Conn_01x08
J10 Conn_01x08
In1
In1_LED
In2
In2_LED
In3
In3_LED
In4
In4_LED
In5
In5_LED
In6
In6_LED
GND_A
GND_B
GND_C
U1A TL074
U1B TL074
U1C TL074
U2A TL074
U2B TL074
U2C TL074
U1D TL074
U2D TL074
U1E TL074
U2E TL074
U3G CD4069
Bias
D7 LL4148
D8 LL4148
D9 LL4148
D10 LL4148
D11 LL4148
D12 LL4148
U3A CD4069
U3B CD4069
U3C CD4069
U3D CD4069
U3E CD4069
U3F CD4069
J12 Conn_01x08
J13 Conn_01x08
Out1
Out2
Out3
Out4
Out5
Out6
+12VDC_B
+12VDC_C
Q1 MMBT3904
Q2 MMBT3904
Q3 MMBT3904
Q4 MMBT3904
Q5 MMBT3904
Q6 MMBT3904
R21 1K
R22 2k7
R23 1K
R24 2k7
R25 1K
R26 2k7
R27 1K
R28 2k7
R29 1K
R30 2k7
R31 1K
R32 2k7
R33 1K
R34 1K
R35 1K
R36 1K
R37 1K
R38 1K
AudioJack1_Switch J14
AudioJack1_Switch J15
AudioJack1_Switch J16
AudioJack1_Switch J17
AudioJack1_Switch J18
AudioJack1_Switch J19
LED D13
LED D14
LED D15
LED D16
LED D17
LED D18
100K R19
10K R20
C1 C
C2 C
C3 C
C4 C
C5 C
J11 Conn_02x08_Odd_Even
+12VDC_B
GND_B
-12VDC
Sheet: /
File: NOT.kicad_sch
Title:
Size: A4
Date:
Rev:
KiCad E.D.A. 9.0.0
Id: 1/1