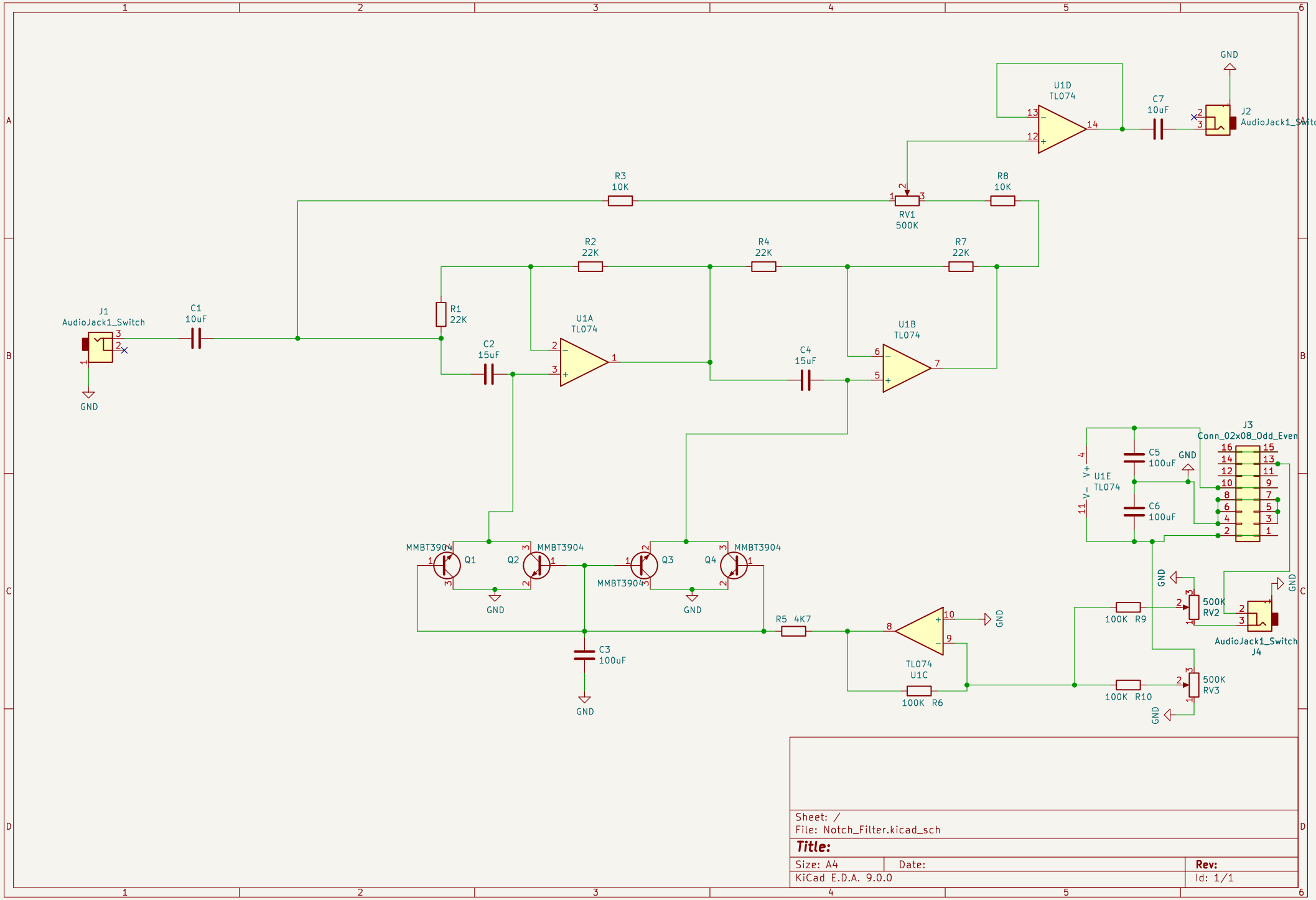
J1
AudioJack1_Switch
C1
10uF
GND
R1
22K
C2
15uF
R2
22K
U1A
TL074
R3
10K
R4
22K
C4
15uF
U1B
TL074
R7
22K
R8
10K
RV1
500K
U1D
TL074
C7
10uF
J2
AudioJack1_Switch
MMBT3904
Q1
Q2
Q3
Q4
C3
100uF
R5 4K7
TL074
U1C
100K R6
U1E
TL074
V+
V-
C5
100uF
C6
100uF
J3
Conn_02x08_Odd_Even
100K R9
500K
RV2
AudioJack1_Switch
J4
100K R10
500K
RV3
Sheet: /
File: Notch_Filter.kicad_sch
Title:
Size: A4
Date:
Rev:
KiCad E.D.A. 9.0.0
Id: 1/1