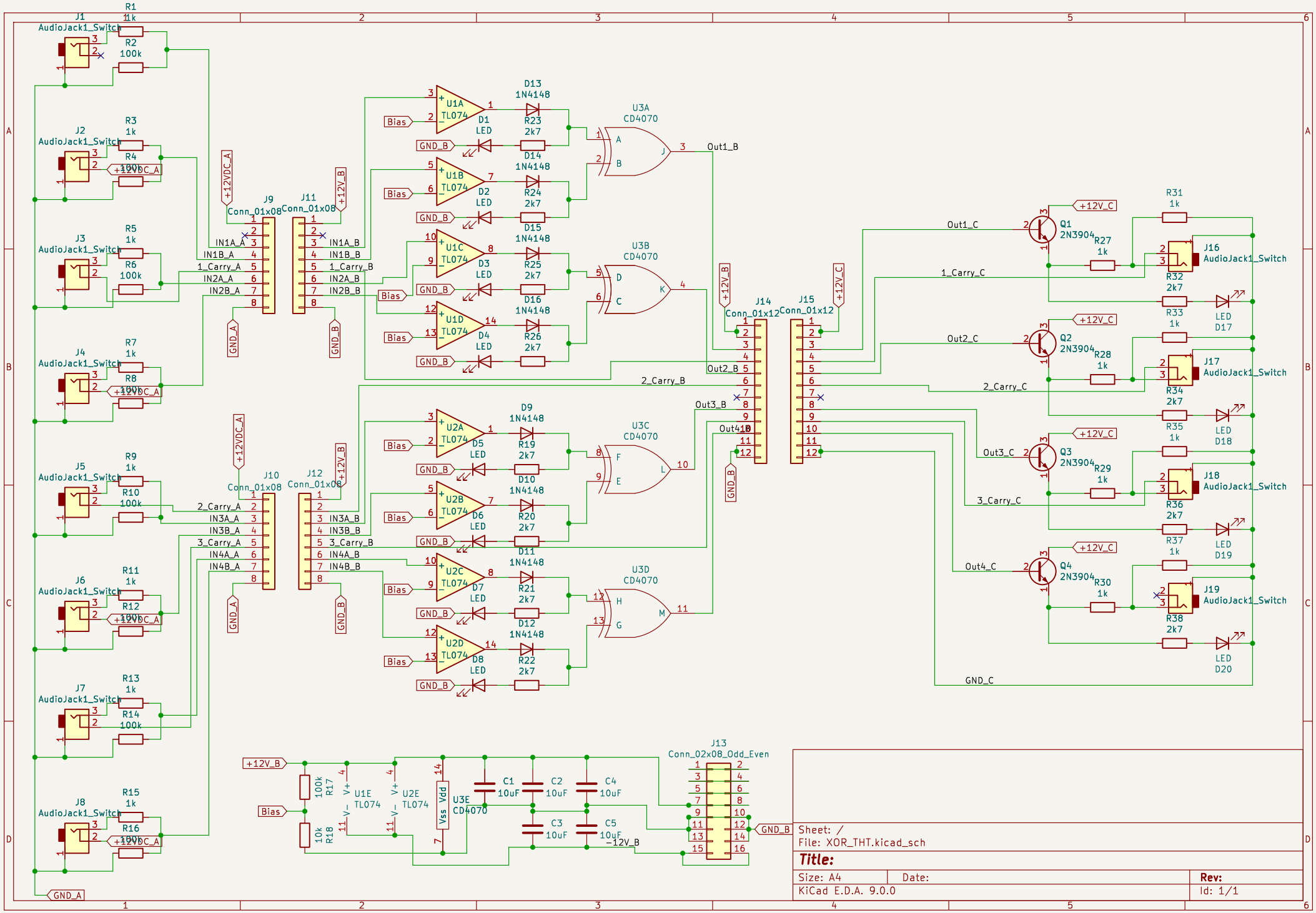
J1 AudioJack1_Switch
J2 AudioJack1_Switch
J3 AudioJack1_Switch
J4 AudioJack1_Switch
J5 AudioJack1_Switch
J6 AudioJack1_Switch
J7 AudioJack1_Switch
J8 AudioJack1_Switch
R1 1k
R2 100k
R3 1k
R4 100k
R5 1k
R6 100k
R7 1k
R8 100k
R9 1k
R10 100k
R11 1k
R12 100k
R13 1k
R14 100k
R15 1k
R16 100k
+12VDC_A
J9 Conn_01x08
J10 Conn_01x08
J11 Conn_01x08
J12 Conn_01x08
+12V_B
GND_A
GND_B
IN1A_A
IN1B_A
1_Carry_A
IN2A_A
IN2B_A
2_Carry_A
IN3A_A
IN3B_A
3_Carry_A
IN4A_A
IN4B_A
IN1A_B
IN1B_B
1_Carry_B
IN2A_B
IN2B_B
IN3A_B
IN3B_B
3_Carry_B
IN4A_B
IN4B_B
Bias
U1A TL074
U1B TL074
U1C TL074
U1D TL074
U2A TL074
U2B TL074
U2C TL074
U2D TL074
D1 LED
D2 LED
D3 LED
D4 LED
D5 LED
D6 LED
D7 LED
D8 LED
D13 1N4148
D14 1N4148
D15 1N4148
D16 1N4148
D9 1N4148
D10 1N4148
D11 1N4148
D12 1N4148
R23 2k7
R24 2k7
R25 2k7
R26 2k7
R19 2k7
R20 2k7
R21 2k7
R22 2k7
U3A CD4070
U3B CD4070
U3C CD4070
U3D CD4070
Out1_B
Out2_B
Out3_B
Out4_B
J14 Conn_01x12
J15 Conn_01x12
+12V_C
Out1_C
1_Carry_C
Out2_C
2_Carry_C
Out3_C
3_Carry_C
Out4_C
GND_C
Q1 2N3904
Q2 2N3904
Q3 2N3904
Q4 2N3904
R27 1k
R28 1k
R29 1k
R30 1k
R31 1k
R32 2k7
R33 1k
R34 2k7
R35 1k
R36 2k7
R37 1k
R38 2k7
J16 AudioJack1_Switch
J17 AudioJack1_Switch
J18 AudioJack1_Switch
J19 AudioJack1_Switch
LED D17
LED D18
LED D19
LED D20
100k R17
10k R18
U1E TL074
U2E TL074
U3E CD4070
C1 10uF
C2 10uF
C3 10uF
C4 10uF
C5 10uF
−12V_B
J13 Conn_02x08_Odd_Even
Sheet: /
File: XOR_THT.kicad_sch
Title:
Size: A4
Date:
Rev:
KiCad E.D.A. 9.0.0
Id: 1/1