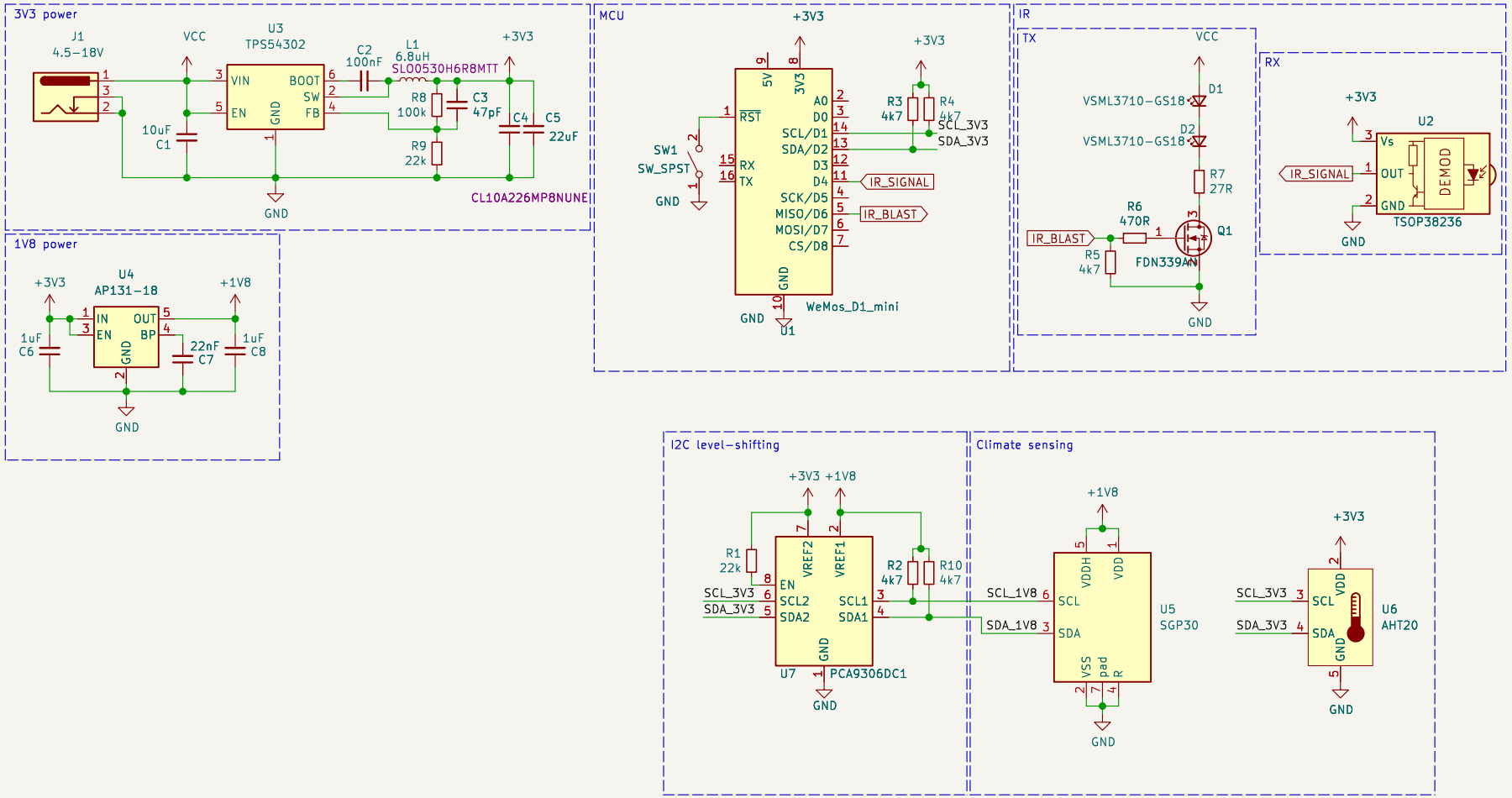

WiFi connected IR blaster / reciever

Sheet: /
File: pcb.kicad_sch

Title: WiFIR

Size: A4	Date:	**Rev: 0.3**
KiCad E.D.A. 9.0.0		Id: 1/1