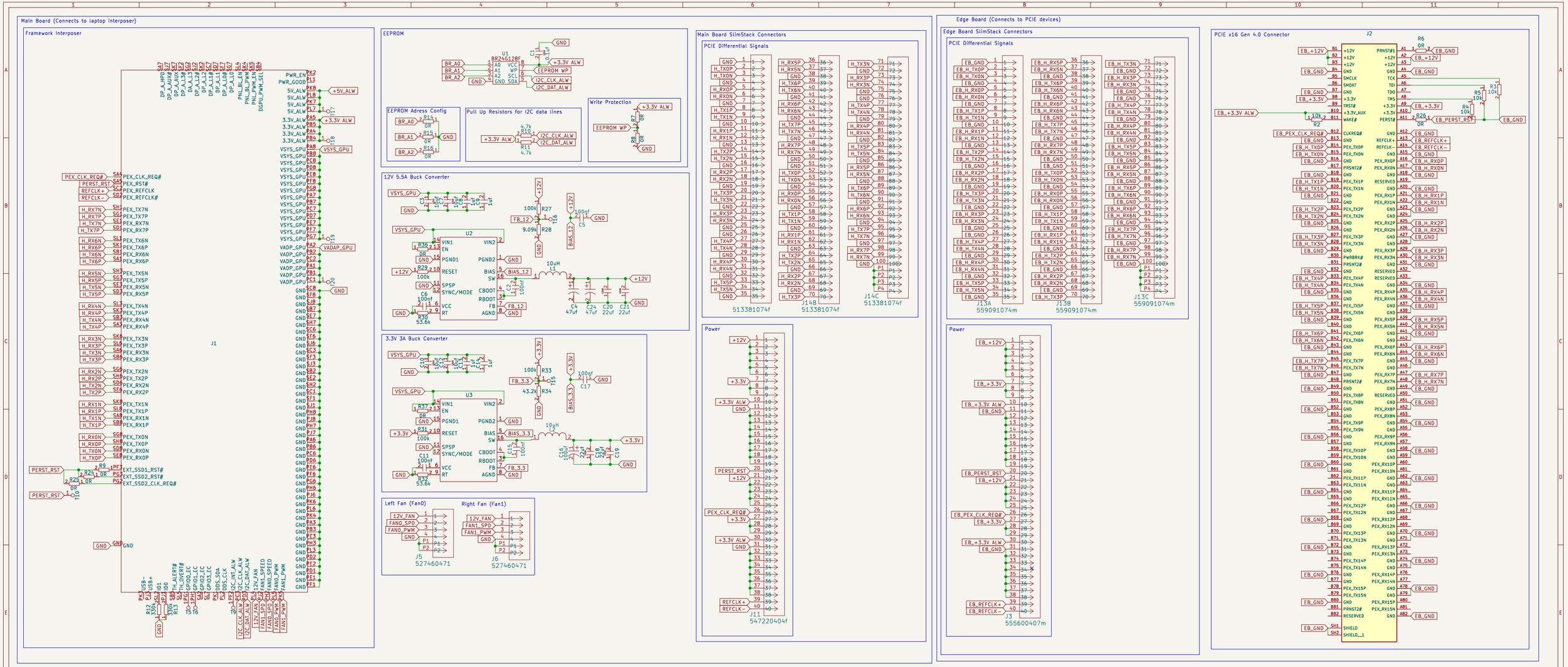

Sheet: /
File: pcie.kicad_sch

Title: Framework 16 PCIE Gen4x8 Expansion Bay Board

Size: User	Date: 2026-01-22	Rev: 0.42
KiCad E.D.A. 9.0.0		Id: 1/1