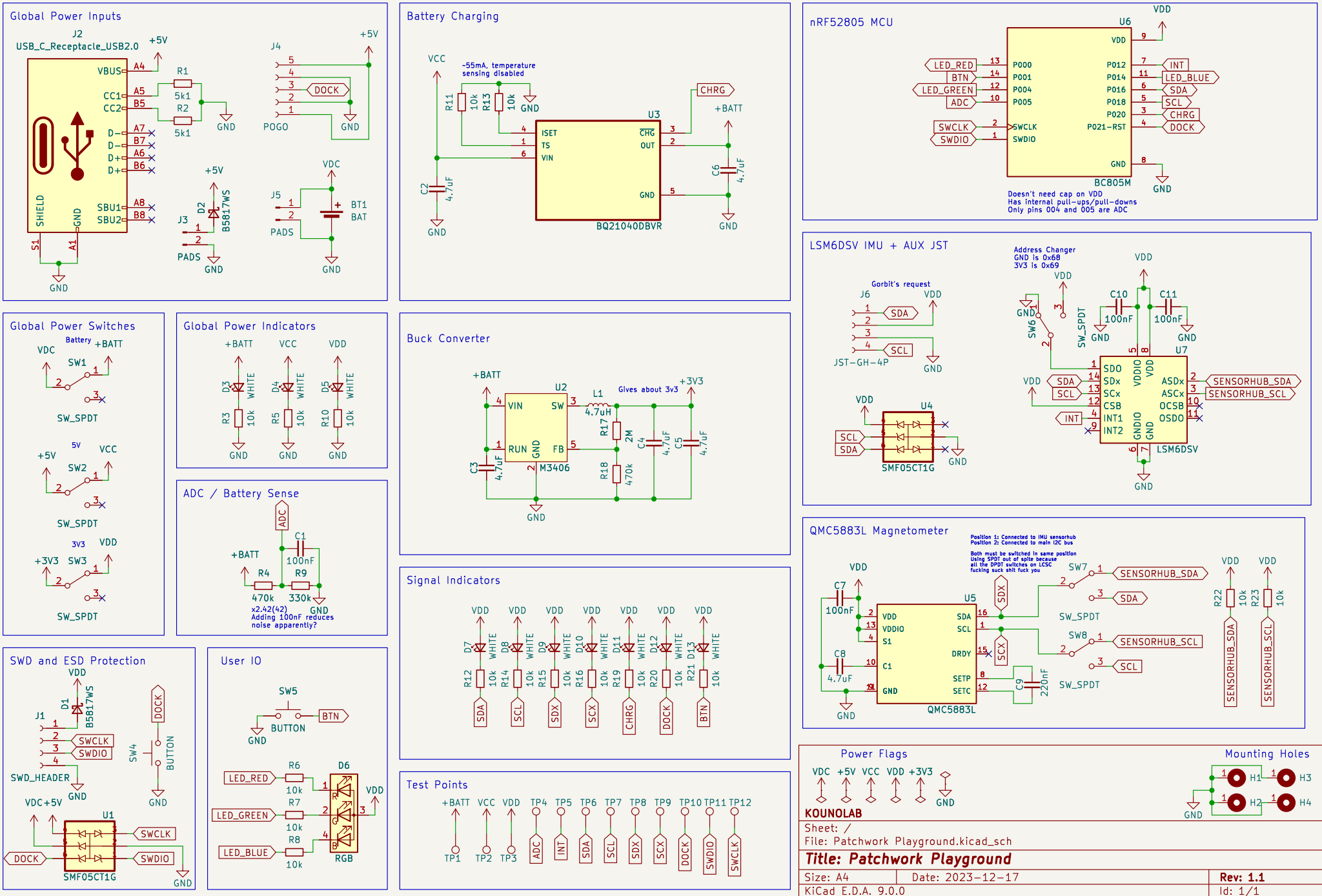
Global Power Inputs
J2
USB_C_Receptacle_USB2.0
VBUS
CC1
CC2
D-
D-
D+
D+
SHIELD
GND
SBU1
SBU2
S1
A1
R1
5k1
R2
5k1
+5V
GND
J4
POGO
DOCK
J3
D2
B5817WS
PADS
J5
PADS
VDC
BT1
BAT
Battery Charging
VCC
-55mA, temperature sensing disabled
R11
10k
R13
10k
C2
4.7uF
U3
ISET
TS
VIN
CHG
OUT
GND
BQ21040DBVR
CHRG
+BATT
C6
4.7uF
nRF52805 MCU
U6
VDD
LED_RED
BTN
LED_GREEN
ADC
SWCLK
SWDIO
P000
P001
P004
P005
P012
P014
P016
P018
P020
P021-RST
INT
LED_BLUE
SDA
SCL
CHRG
DOCK
BC805M
Doesn't need cap on VDD
Has internal pull-ups/pull-downs
Only pins 004 and 005 are ADC
Global Power Switches
Battery
VDC
+BATT
SW1
SW_SPDT
5V
+5V
VCC
SW2
SW_SPDT
3V3
+3V3
VDD
SW3
SW_SPDT
Global Power Indicators
+BATT
VCC
VDD
D3
D4
D5
WHITE
R3
R5
R10
10k
GND
ADC / Battery Sense
ADC
C1
100nF
+BATT
R4
470k
R9
330k
x2.42(42)
Adding 100nF reduces noise apparently?
Buck Converter
+BATT
U2
VIN
SW
RUN
GND
FB
M3406
L1
4.7uH
Gives about 3v3
+3V3
R17
2M
R18
470k
C3
4.7uF
C4
4.7uF
C5
4.7uF
LSM6DSV IMU + AUX JST
Gorbit's request
J6
SDA
SCL
JST-GH-4P
U4
SMF05CT1G
Address Changer
GND is 0x68
3V3 is 0x69
SW6
SW_SPDT
C10
100nF
C11
100nF
U7
SDO
SDx
SCx
CSB
INT1
INT2
VDDIO
GNDIO
ASDx
ASCx
OCSB
OSDO
SENSORHUB_SDA
SENSORHUB_SCL
LSM6DSV
QMC5883L Magnetometer
Position 1: Connected to IMU sensorhub
Position 2: Connected to main I2C bus
Both must be switched in same position
Using SPDT out of spite because
all the DPDT switches on LCSC
fucking suck shit fuck you
C7
100nF
C8
4.7uF
U5
VDD
VDDIO
S1
C1
GND
SDA
SCL
DRDY
SETP
SETC
SDX
SCX
C9
220nF
QMC5883L
SW7
SW8
SW_SPDT
R22
10k
R23
10k
Signal Indicators
R12
R14
R15
R16
R19
R20
R21
D7
D8
D9
D10
D11
D12
D13
SDA
SCL
SDX
SCX
CHRG
DOCK
BTN
Test Points
+BATT
VCC
VDD
TP4
TP5
TP6
TP7
TP8
TP9
TP10
TP11
TP12
TP1
TP2
TP3
ADC
INT
SDA
SCL
SDX
SCX
DOCK
SWDIO
SWCLK
SWD and ESD Protection
J1
D1
B5817WS
SWCLK
SWDIO
SWD_HEADER
SW4
BUTTON
DOCK
VDC+5V
U1
SMF05CT1G
User IO
SW5
BUTTON
BTN
R6
10k
R7
10k
R8
10k
LED_RED
LED_GREEN
LED_BLUE
D6
RGB
Power Flags
VDC
+5V
VCC
VDD
+3V3
GND
Mounting Holes
H1
H2
H3
H4
KOUNOLAB
Sheet: /
File: Patchwork Playground.kicad_sch
Title: Patchwork Playground
Size: A4
Date: 2023-12-17
Rev: 1.1
KiCad E.D.A. 9.0.0
Id: 1/1