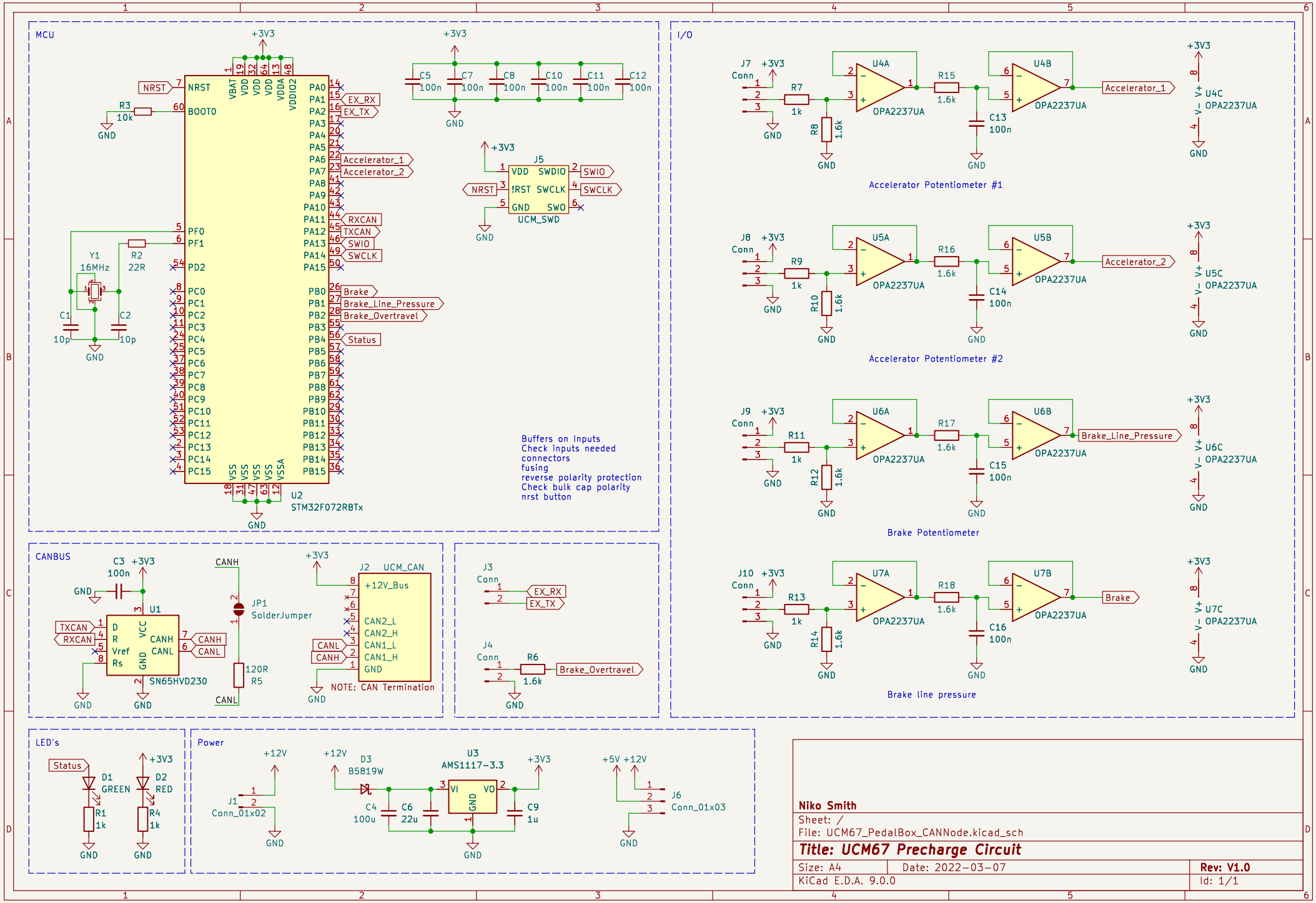
MCU
U2
STM32F072RBTx
NRST
BOOT0
R3
10k
Y1
16MHz
R2
22R
C1
10p
C2
10p
C5 100n
C7 100n
C8 100n
C10 100n
C11 100n
C12 100n
+3V3
GND
EX_RX
EX_TX
Accelerator_1
Accelerator_2
RXCAN
TXCAN
SWIO
SWCLK
Brake
Brake_Line_Pressure
Brake_Overtravel
Status
J5
UCM_SWD
VDD SWDIO
!RST SWCLK
GND SWO
Buffers on Inputs
Check inputs needed
connectors
fusing
reverse polarity protection
Check bulk cap polarity
nrst button
CANBUS
C3 100n
U1
SN65HVD230
D
R
Vref
Rs
VCC
CANH
CANL
JP1
SolderJumper
120R
R5
J2 UCM_CAN
+12V_Bus
CAN2_L
CAN2_H
CAN1_L
CAN1_H
NOTE: CAN Termination
J3
Conn
J4
R6
1.6k
I/O
J7
J8
J9
J10
R7
R8
R9
R10
R11
R12
R13
R14
1k
1.6k
U4A
U4B
U4C
U5A
U5B
U5C
U6A
U6B
U6C
U7A
U7B
U7C
OPA2237UA
R15
R16
R17
R18
C13 100n
C14 100n
C15 100n
C16 100n
Accelerator Potentiometer #1
Accelerator Potentiometer #2
Brake Potentiometer
Brake line pressure
LED´s
D1
GREEN
D2
RED
R1
1k
R4
1k
Power
J1
Conn_01x02
D3
B5819W
U3
AMS1117-3.3
VI
VO
GND
C4
100u
C6
22u
C9
1u
+5V +12V
J6
Conn_01x03
Niko Smith
Sheet: /
File: UCM67_PedalBox_CANNode.kicad_sch
Title: UCM67 Precharge Circuit
Size: A4
Date: 2022-03-07
Rev: V1.0
KiCad E.D.A. 9.0.0
Id: 1/1