8 pins for TFT (VCC - EN - GND - 3 SPI - 2 GPIO)
6 pins LRF (VCC - GND - Rx - Tx - In - GND)
10 pins for Buttons (10 GPIOs)
5 pins for sensors (Vcc - GND - 3 SPI)

Laser: Tx: A9
        Rx: A10

Sensor: CS: B12
         CLK: B13
         MISO: B14

TFT: BLK: 3.3V
      DC: A1
      RES: A2
      CS: A4
      CLK: A5
      EN: A3
      MOSI: A7

Buttons: all internal Pull up
1- A8
2- A12
3- A15
4- B4
5- B5
6- B6
7- B7
8- B8
9- B9
10- B15

Brightness SW:
B11
B10
B1
B0

Board Size 60mm X 40mm

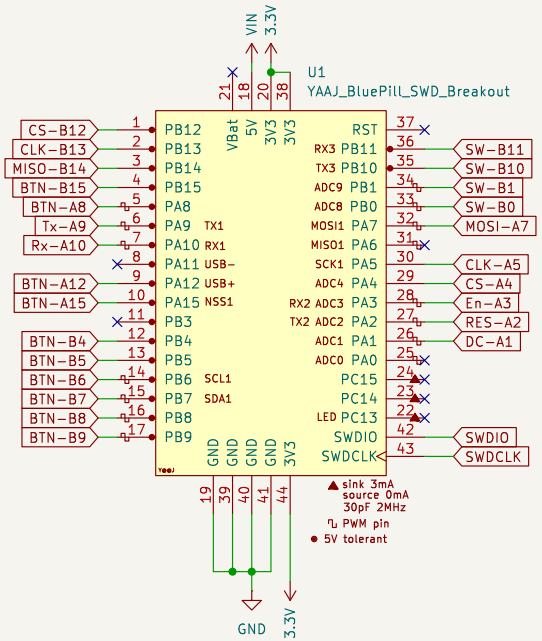

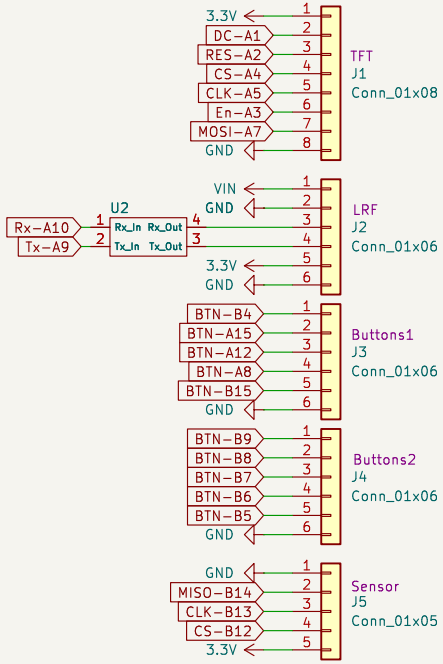

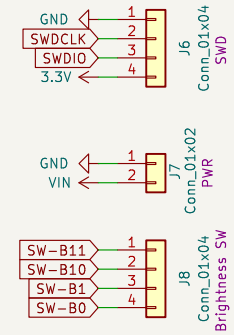

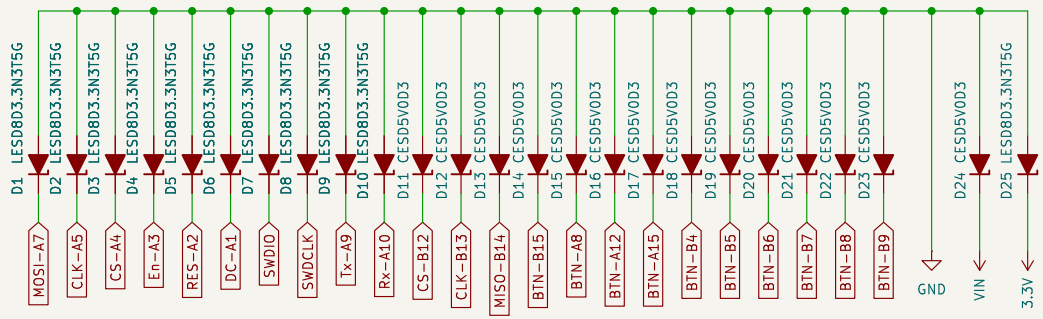

H1 MountingHole
H2 MountingHole
H3 MountingHole

Design By: Mohamed U3
AIO
Sheet: /
File: D98.kicad_sch

Title: stm32 connection Borad

Size: A4	Date: 2025-11-05	**Rev: v3.1**
KiCad E.D.A. 9.0.0		Id: 1/1