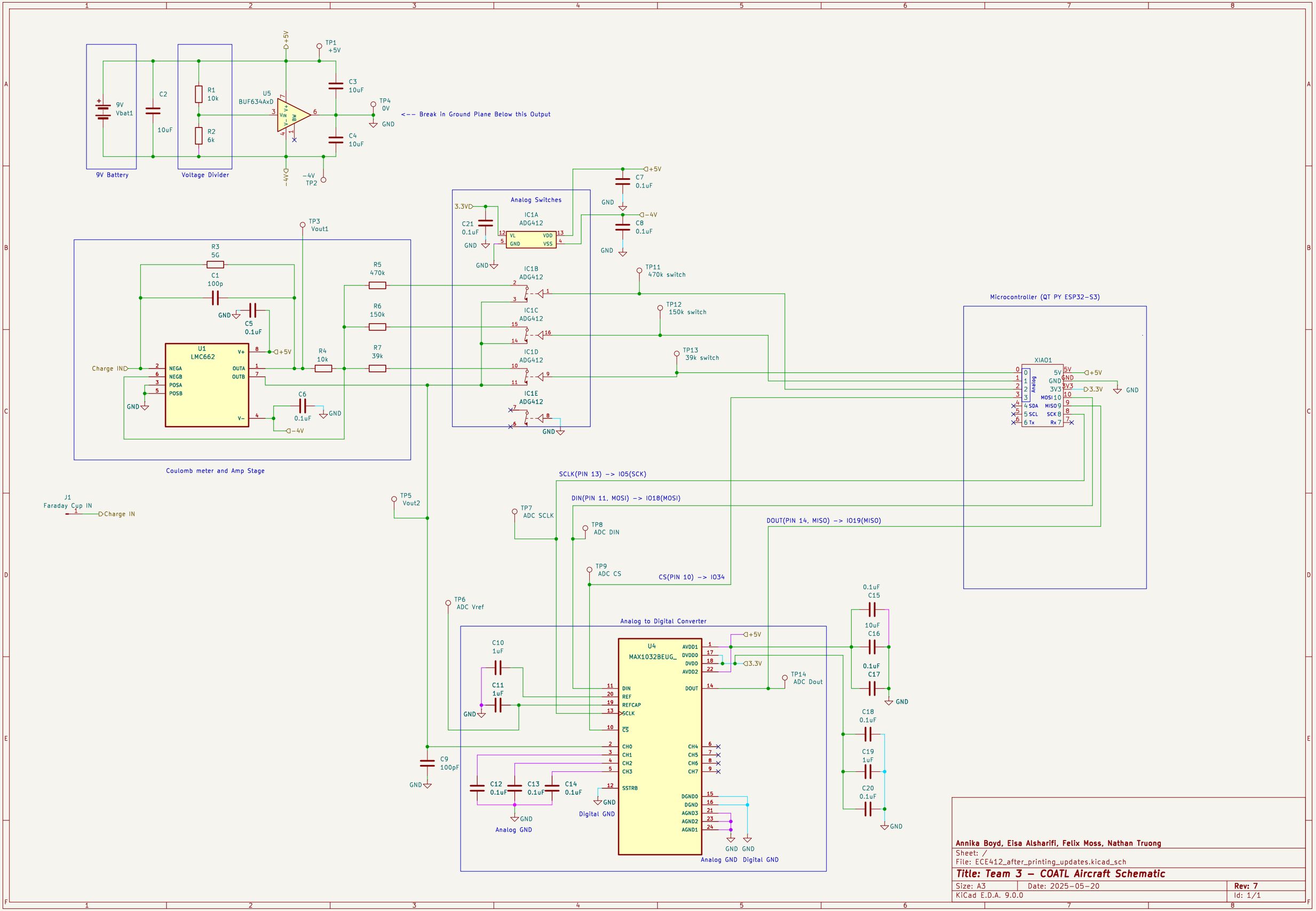

Annika Boyd, Eisa Alsharifi, Felix Moss, Nathan Truong

Sheet: /

File: ECE412_after_printing_updates.kicad_sch

Title: Team 3 – COATL Aircraft Schematic

Size: A3	Date: 2025-05-20	Rev: 7
KiCad E.D.A. 9.0.0		Id: 1/1