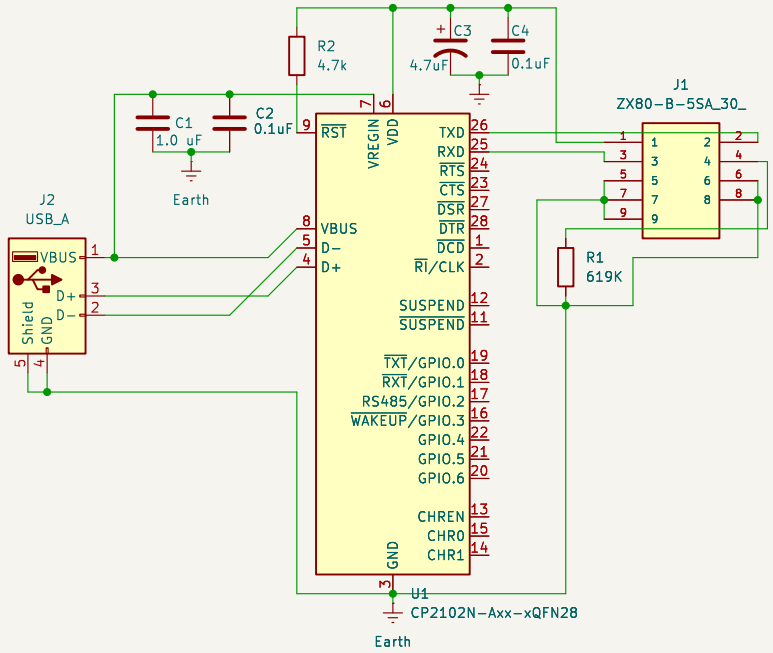

Otus9051

Sheet: /

File: usbjig.kicad_sch

Title: Samsung UART Jig (619K Ohm Version)

Size: A4	Date: 2024-06-23	**Rev: 1.0**
KiCad E.D.A. 9.0.0		Id: 1/1