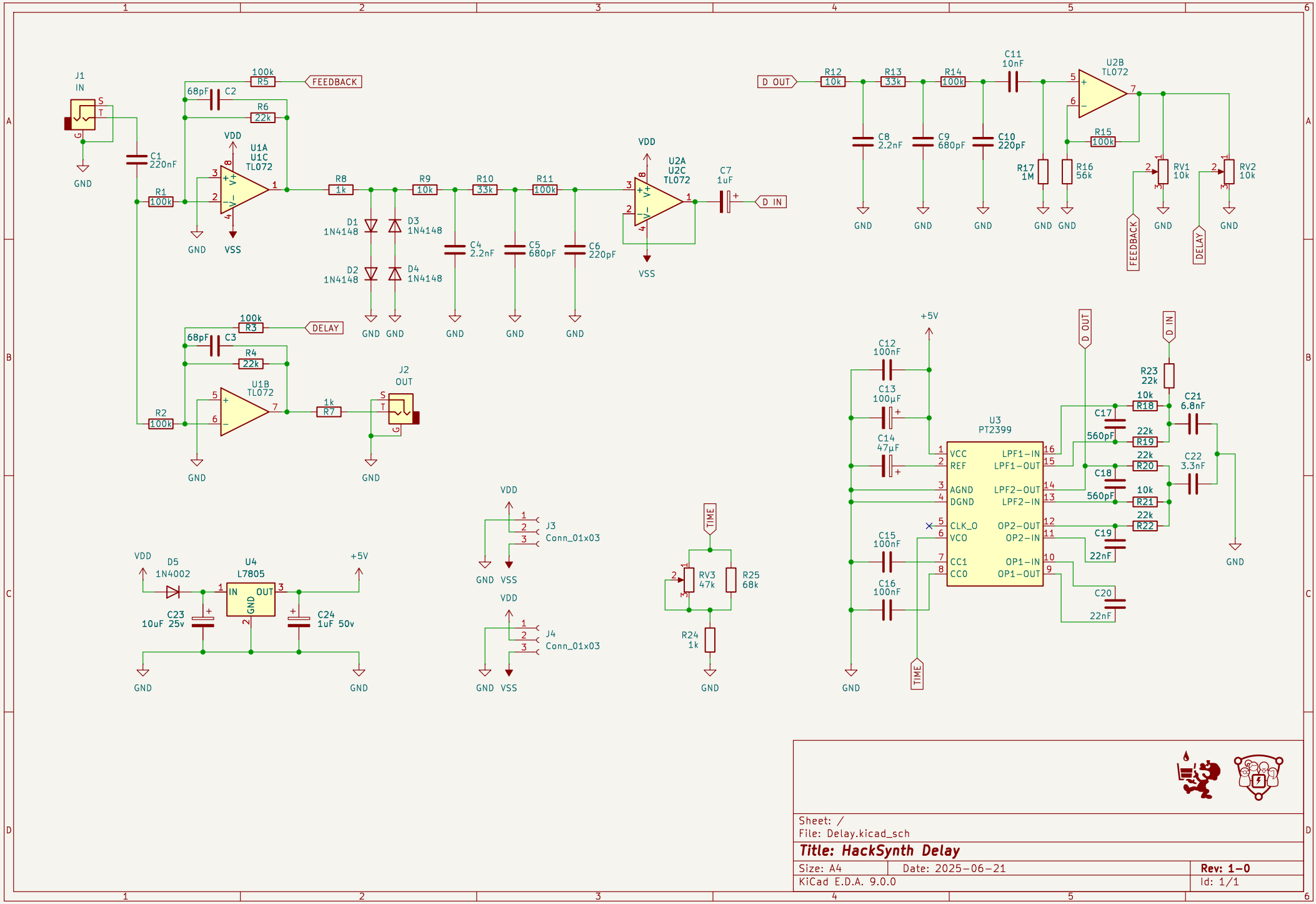

Sheet: /
File: Delay.kicad_sch

Title: HackSynth Delay

Size: A4	Date: 2025-06-21	Rev: 1-0
KiCad E.D.A. 9.0.0		Id: 1/1