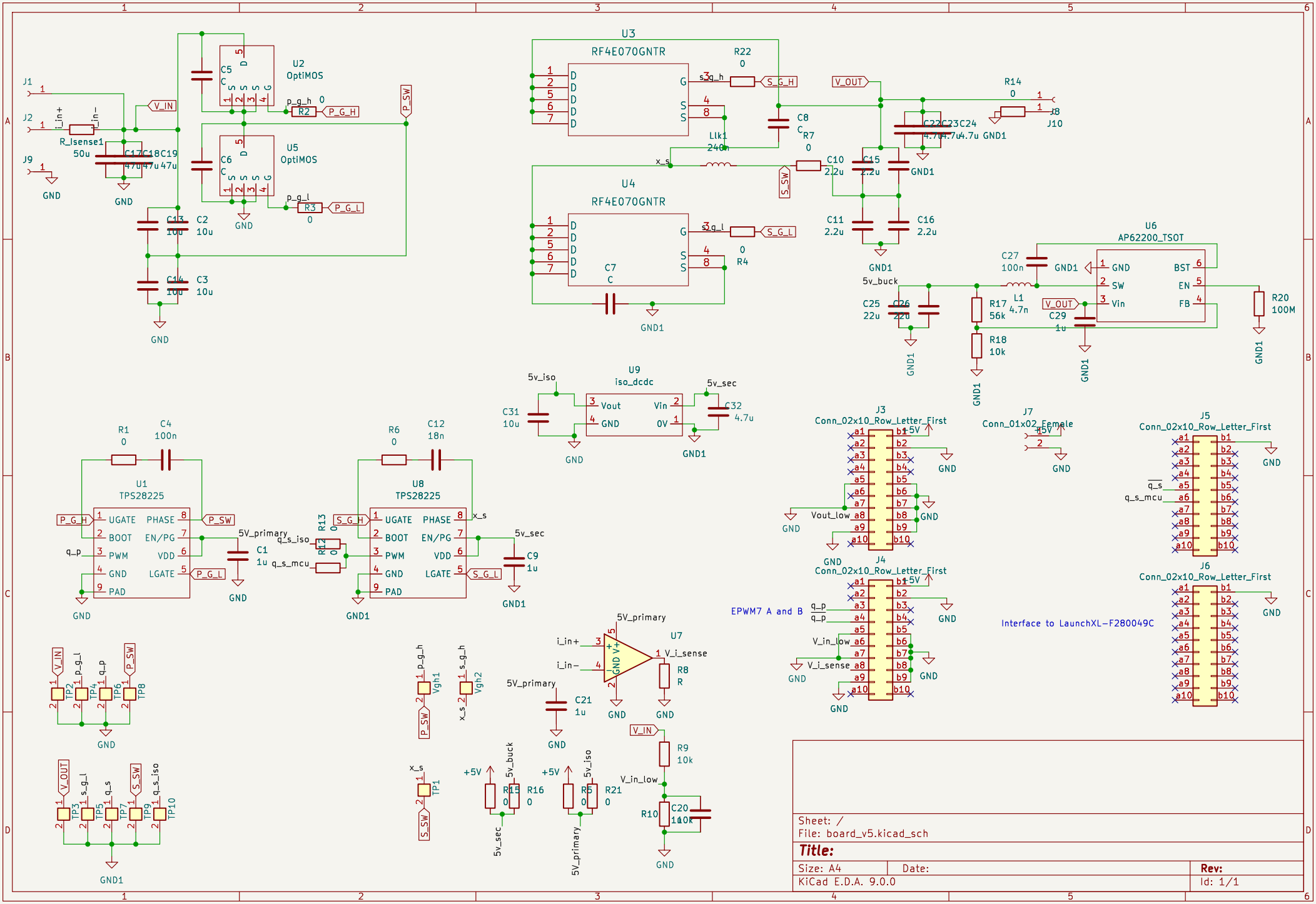
U2
OptiMOS
U5
OptiMOS
U3
RF4E070GNTR
U4
RF4E070GNTR
U6
AP62200_TSOT
U9
iso_dcdc
U1
TPS28225
U8
TPS28225
U7
J3
Conn_02x10_Row_Letter_First
J4
Conn_02x10_Row_Letter_First
J5
Conn_02x10_Row_Letter_First
J6
Conn_02x10_Row_Letter_First
J7
Conn_01x02_Female
EPWM7 A and B
Interface to LaunchXL-F280049C
Sheet: /
File: board_v5.kicad_sch
Title:
Size: A4
Date:
Rev:
KiCad E.D.A. 9.0.0
Id: 1/1