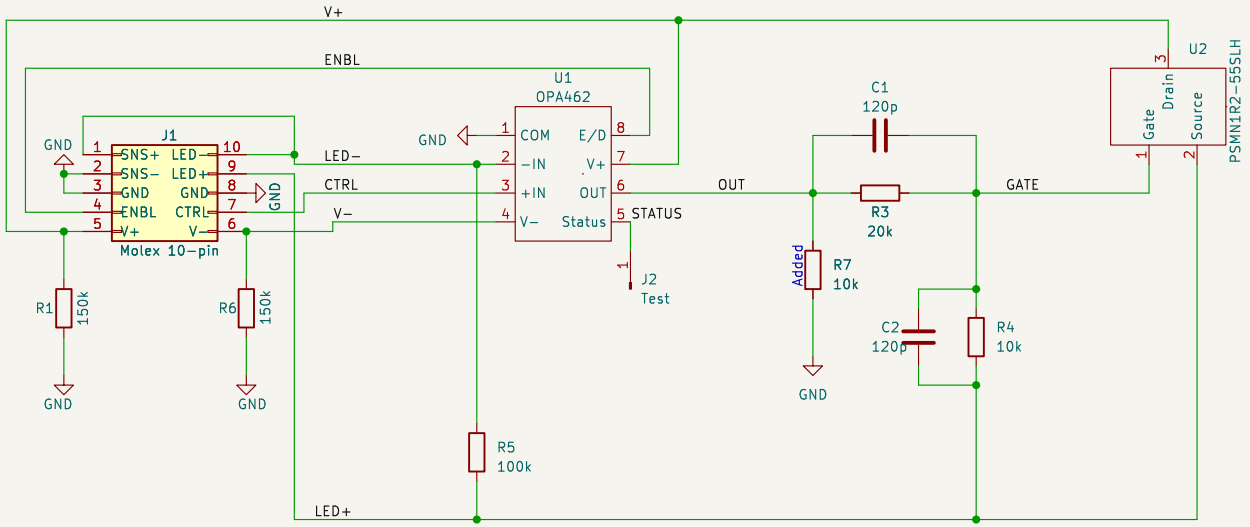

Author: Shilin Ray
Modified by: Zhiheng Sheng
Edited 20240305 with correct MOSFET and additional external resistor

SBC / Northwestern University

Sheet: /
File: LED Driver.kicad_sch

Title: SBC LED driver

Size: A5	Date: 2023-05-30	**Rev: v2b**
KiCad E.D.A. 9.0.0		Id: 1/1