TinyTapeout ASIC Simulator (for TT3)

This breakout maps an ICE40UP5K (SG48ITR) FPGA to the TT 1,2 and 3 breakout board.

It is designed to allow both stand-alone use and for interaction and support from the TT demo board.

When used with the demo board, few components are required as the hosting PCB can provide power as well as the required serial flash.

The bootloader may be used along with the USB interface to allow for simple updates via DFU (see Flash and programming sections below).

An oscillator, flash and regulation are provided for stand-alone operation (see Variants note).

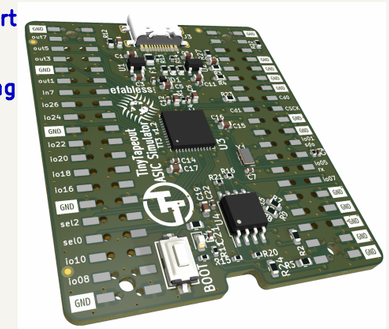

USB Power and bootloader

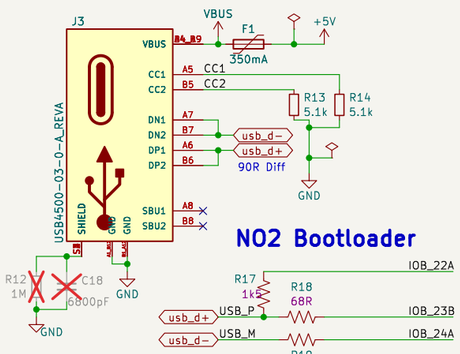

This mode requires the flash to be programmed with the tinyFPGA bootloader.

To enable:
- Program Flash with bootloader
- Install R18, R19 (68 Ohms)
- Install R17 (1.5K)

Power

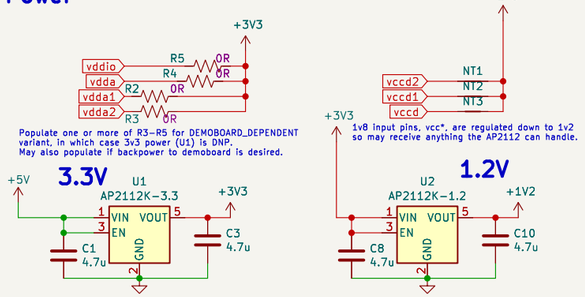

Populate one or more of R3-R5 for DEMOBOARD_DEPENDENT variant, in which case 3v3 power (U1) is DNP. May also populate if backpower to demoboard is desired.

1v8 input pins, vcc*, are regulated down to 1v2 so may receive anything the AP2112 can handle.

Variants

The "Variant" field for components indicates whether to stuff for specific variations of board.

* USB: usb connector and power
* USB_COMM: TinyFPGA bootloader or other USB comms
* USE_STANDALONE: board may self-powered and host its own flash, osc...
* DEMOBOARD_DEPENDENT: board gets power and flash from (required) demoboard

USB_COMM depends on USB. USE_STANDALONE and DEMOBOARD_DEPENDENT are mutually exclusive.

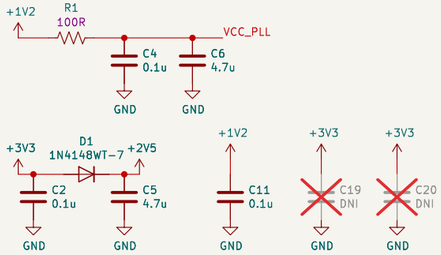

FPGA

The FPGA is connected to a number of standard TT3 breakout pins:
* inputs
* outputs
* low nibble of active select
* Housekeeping SPI
* caravel clock and RST
* optionally, caravel flash

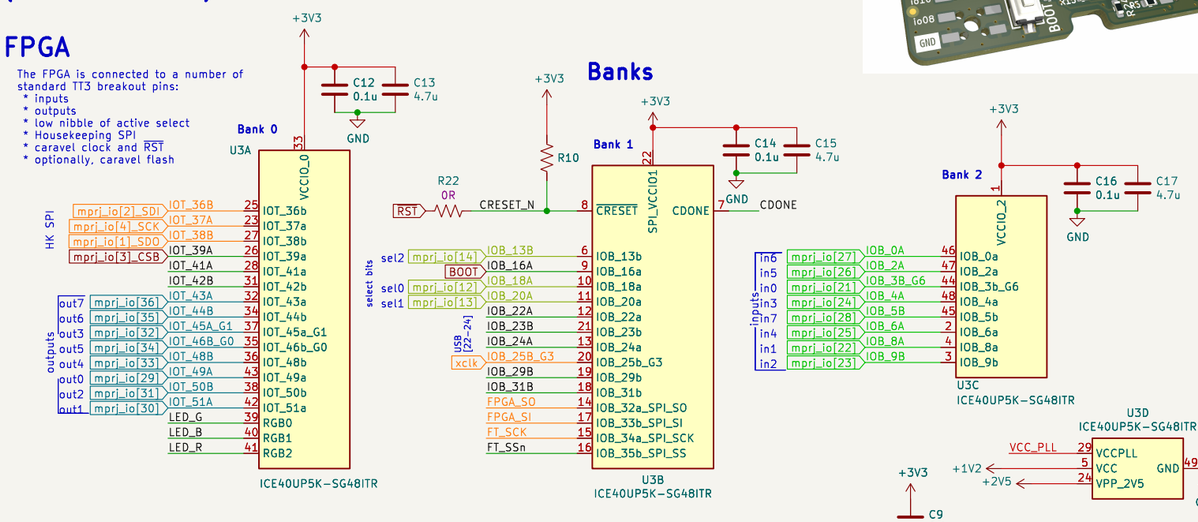

SPI Flash

Stuff one set of:
* SPI flash and supporting components and R24
* R23 jumper resistors, to use demoboard flash instead.

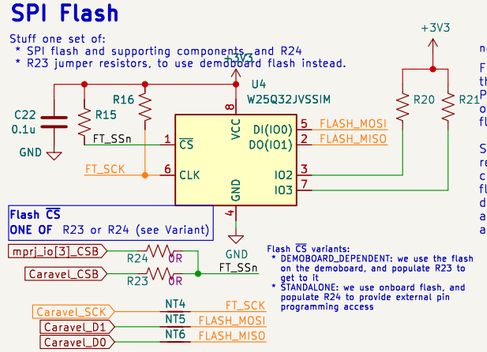

Flash CS variants:
* DEMOBOARD_DEPENDENT: we use the flash on the demoboard, and populate R23 to get to it
* STANDALONE: we use onboard flash, and populate R24 to provide external pin programming access

FPGA CRAM/Flash programming

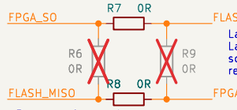

Programming modes:
Flash: Default, R7/R8 short
CRAM: Optional, R6/R9 short

Layout Note:
Layout with overlapping resistors so that only horizontal/vertical resistors need to be installed.

Programming

no2bootloader used to allow USB programming for users.

For this to work, the bootloader must be burned to the flash. Ideally, this will be burned prior to PCBA (it may then be updated via USB DFU) but in other cases it will be necessary to access the flash memory directly.

SPI lines used by Caravel to access flash are reused here (SCK, D0 and D1). However, to avoid contention with the CS line in cases where flash is installed on both this PCB and the demoboard, a 0R jumper directs the line according to the selected variant (see note at left).

Once the bootloader is installed, programming becomes a question of
* holding the BOOT switch
* plugging into computer USB
* sending DFU to correct alternate

Device shows up on USB as [1d50:6146] with four alternate endpoints
0: ICE40 bitstream
1: RISC-V firmware
2: Bootloader bitstream
3: Bootloader firmware

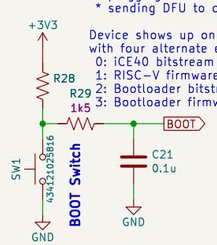

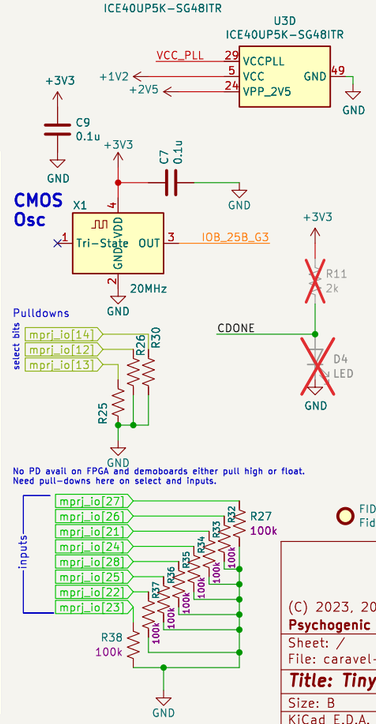

TT3 Breakout Headers

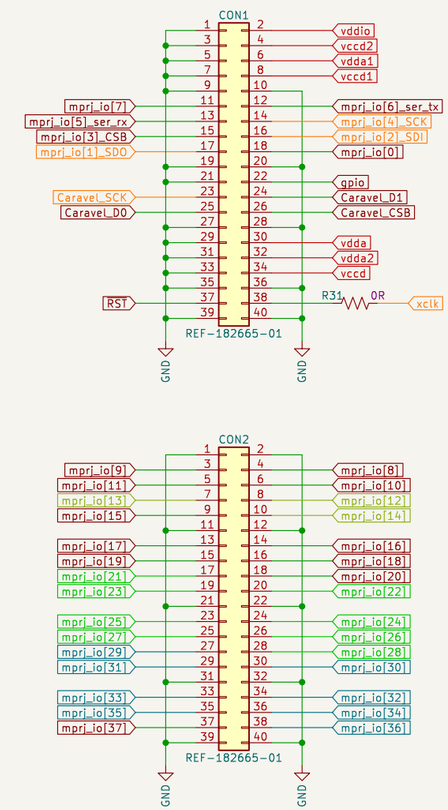

Note: this is the TT123 breakout header arrangement. I *think* it was derived during the WLCSP days of the ICs but, regardless of the reason, it's a pretty awful pinout which has be reworked (breaking change) for TT4+.

(C) 2023, 2024 Pat Deegan

Psychogenic Technologies

Sheet: /

File: caravel-breakout-fpga-ICE40UP5K-TT3.kicad_sch

Title: TinyTapeout ASIC Simulator		
Size: B	Date: 2024-01-11	**Rev: 1.2**
KiCad E.D.A. 9.0.0		Id: 1/1