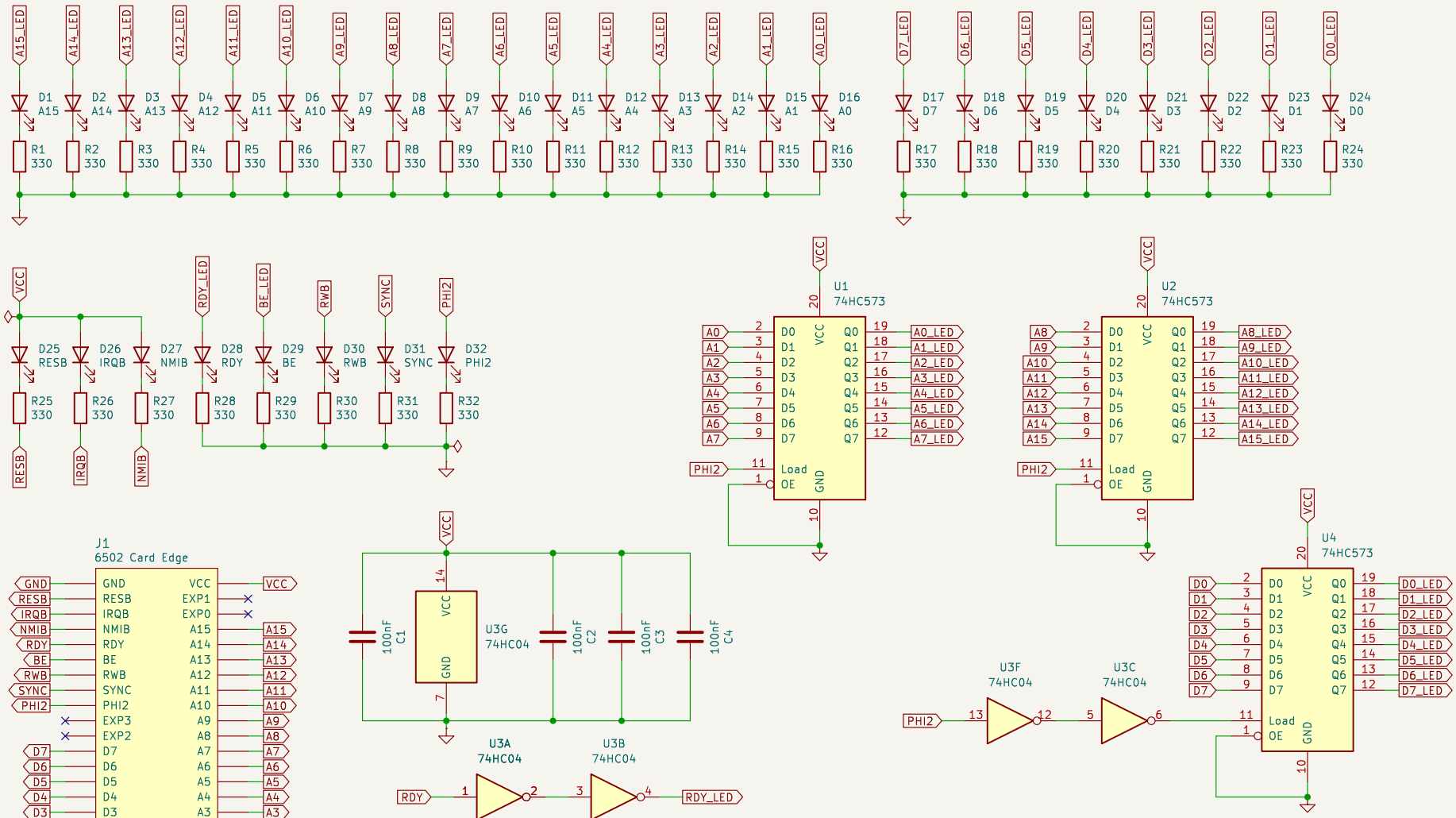

A.C. Wright Design

Sheet: /

File: Blinkenlights Card.kicad_sch

Title: 6502 Blinkenlights Card

Size: USLetter	Date: 2024-06-16	**Rev: 1.0**
KiCad E.D.A. 9.0.0		Id: 1/1