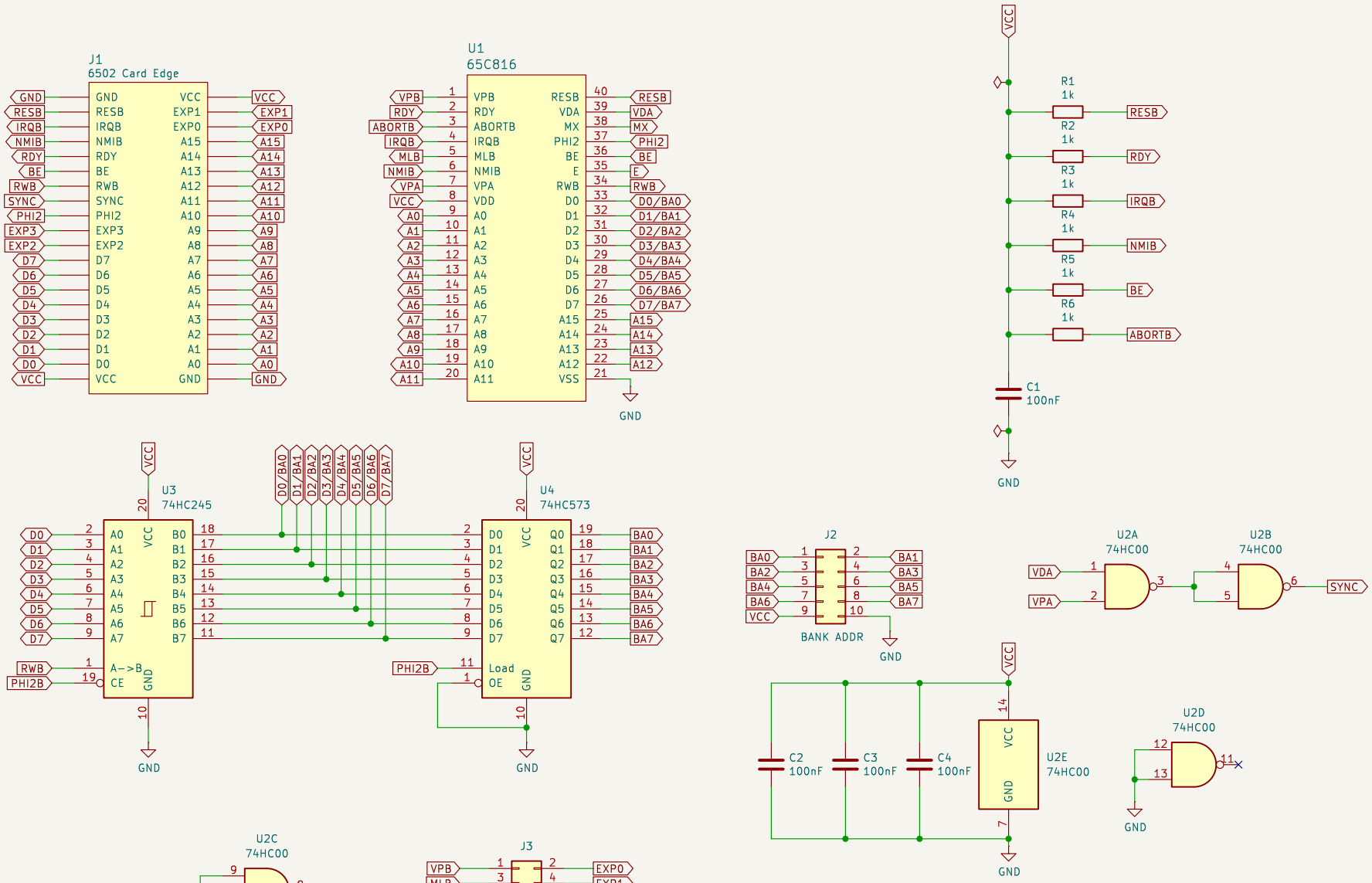

A.C. Wright Design / bahamutkotd

Sheet: /

File: CPU Card Pro.kicad_sch

Title: 6502 CPU Card Pro

Size: USLetter	Date: 2025-10-19	**Rev: 1.0**
KiCad E.D.A. 9.0.0		Id: 1/1