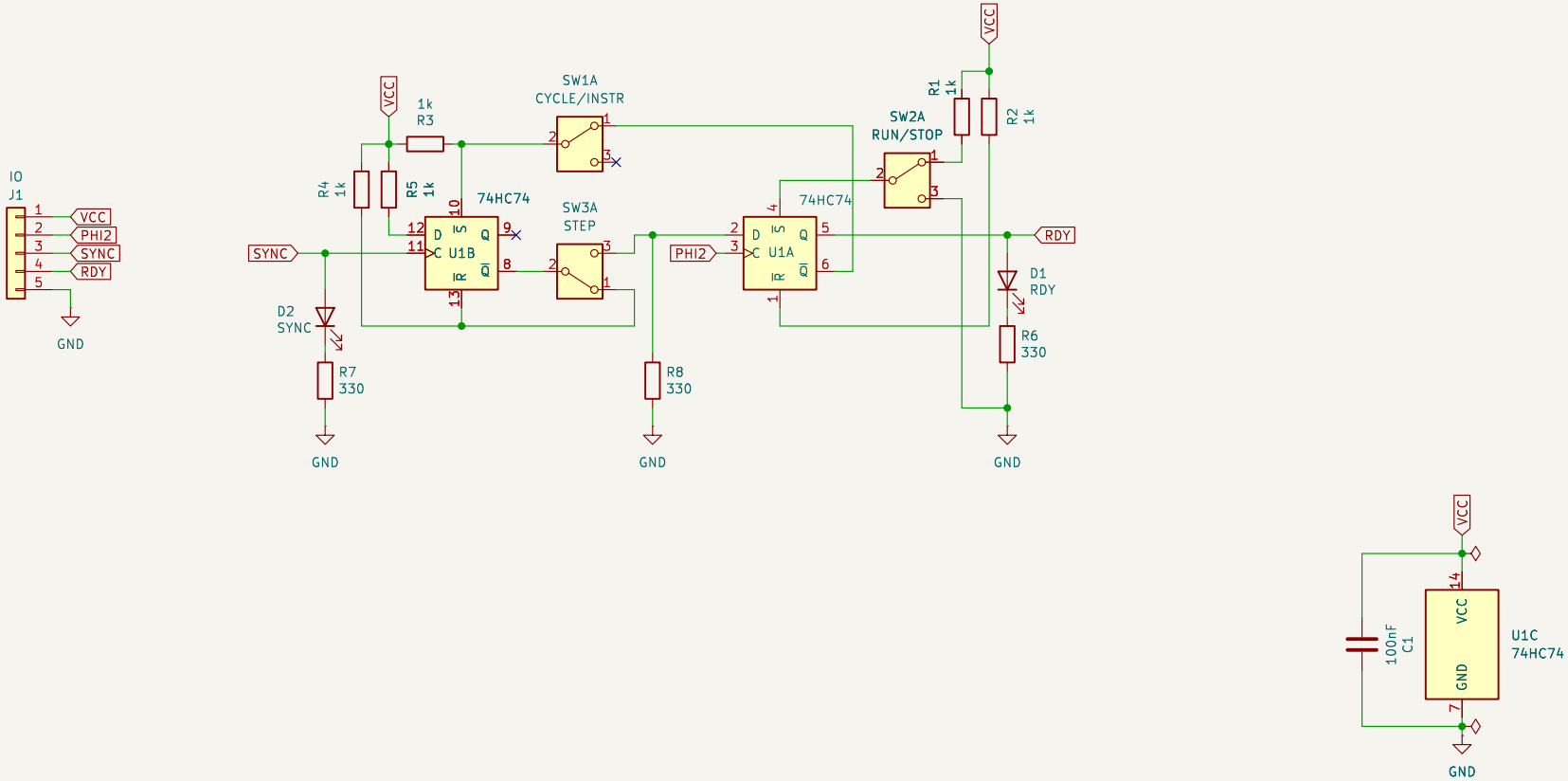

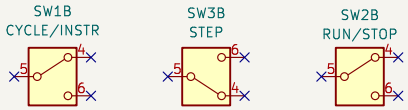

A.C. Wright Design

Sheet: /

File: Clock Helper.kicad_sch

Title: 6502 Clock Helper

Size: USLetter	Date: 2025-11-16	**Rev: 1.0**
KiCad E.D.A. 9.0.0		Id: 1/1