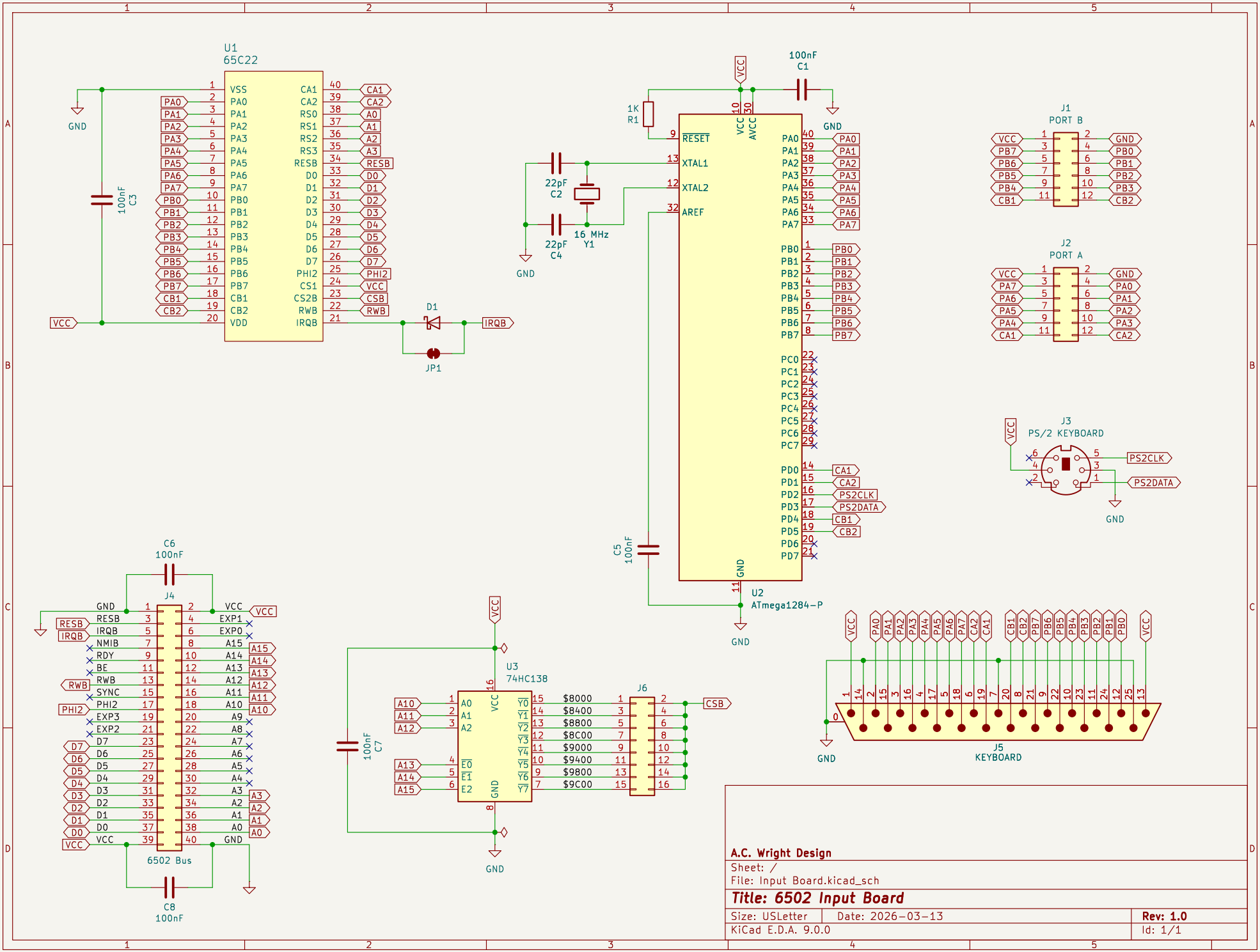
U1
65C22
VSS
PA0
PA1
PA2
PA3
PA4
PA5
PA6
PA7
PB0
PB1
PB2
PB3
PB4
PB5
PB6
PB7
CB1
CB2
VDD
CA1
CA2
RS0
RS1
RS2
RS3
RESB
D0
D1
D2
D3
D4
D5
D6
D7
PHI2
CS1
CS2B
RWB
IRQB
GND
VCC
100nF
C3
D1
JP1
IRQB
1K
R1
22pF
C2
22pF
C4
16 MHz
Y1
100nF
C1
RESET
XTAL1
XTAL2
AREF
AVCC
PC0
PC1
PC2
PC3
PC4
PC5
PC6
PC7
PD0
PD1
PD2
PD3
PD4
PD5
PD6
PD7
C5
100nF
U2
ATmega1284-P
J1
PORT B
J2
PORT A
J3
PS/2 KEYBOARD
PS2CLK
PS2DATA
C6
100nF
J4
6502 Bus
C8
100nF
U3
74HC138
A0
A1
A2
E0
E1
E2
Y0
Y1
Y2
Y3
Y4
Y5
Y6
Y7
$8000
$8400
$8800
$8C00
$9000
$9400
$9800
$9C00
C7
100nF
J6
CSB
J5
KEYBOARD
A.C. Wright Design
Sheet: /
File: Input Board.kicad_sch
Title: 6502 Input Board
Size: USLetter
Date: 2026-03-13
Rev: 1.0
KiCad E.D.A. 9.0.0
Id: 1/1