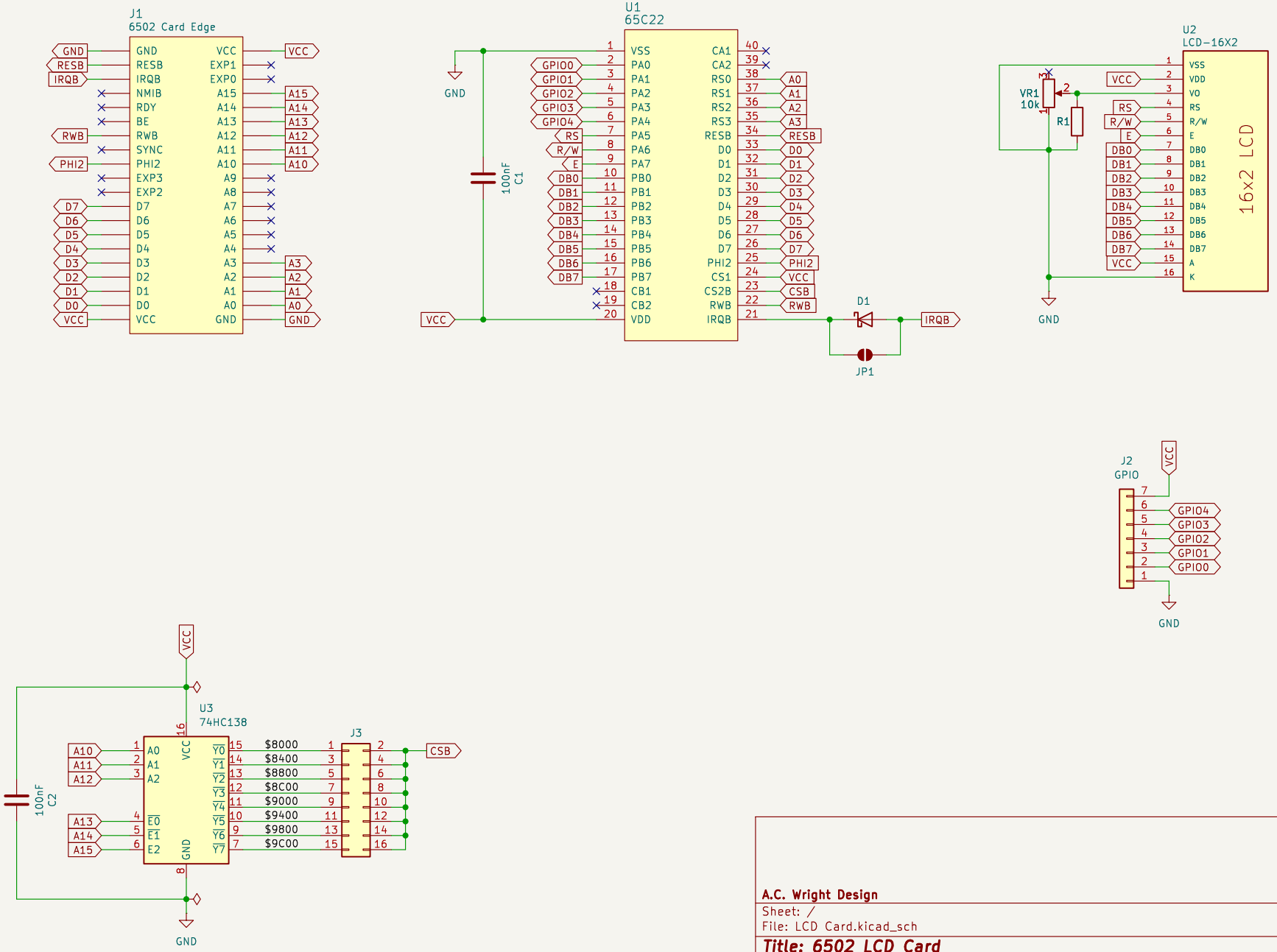


**A.C. Wright Design**

Sheet: /

File: LCD Card.kicad_sch

***Title: 6502 LCD Card***

| | | |
|---|---|---|
| Size: USLetter | Date: 2024-06-12 | **Rev: 1.0** |
| KiCad E.D.A. 9.0.0 | | Id: 1/1 |