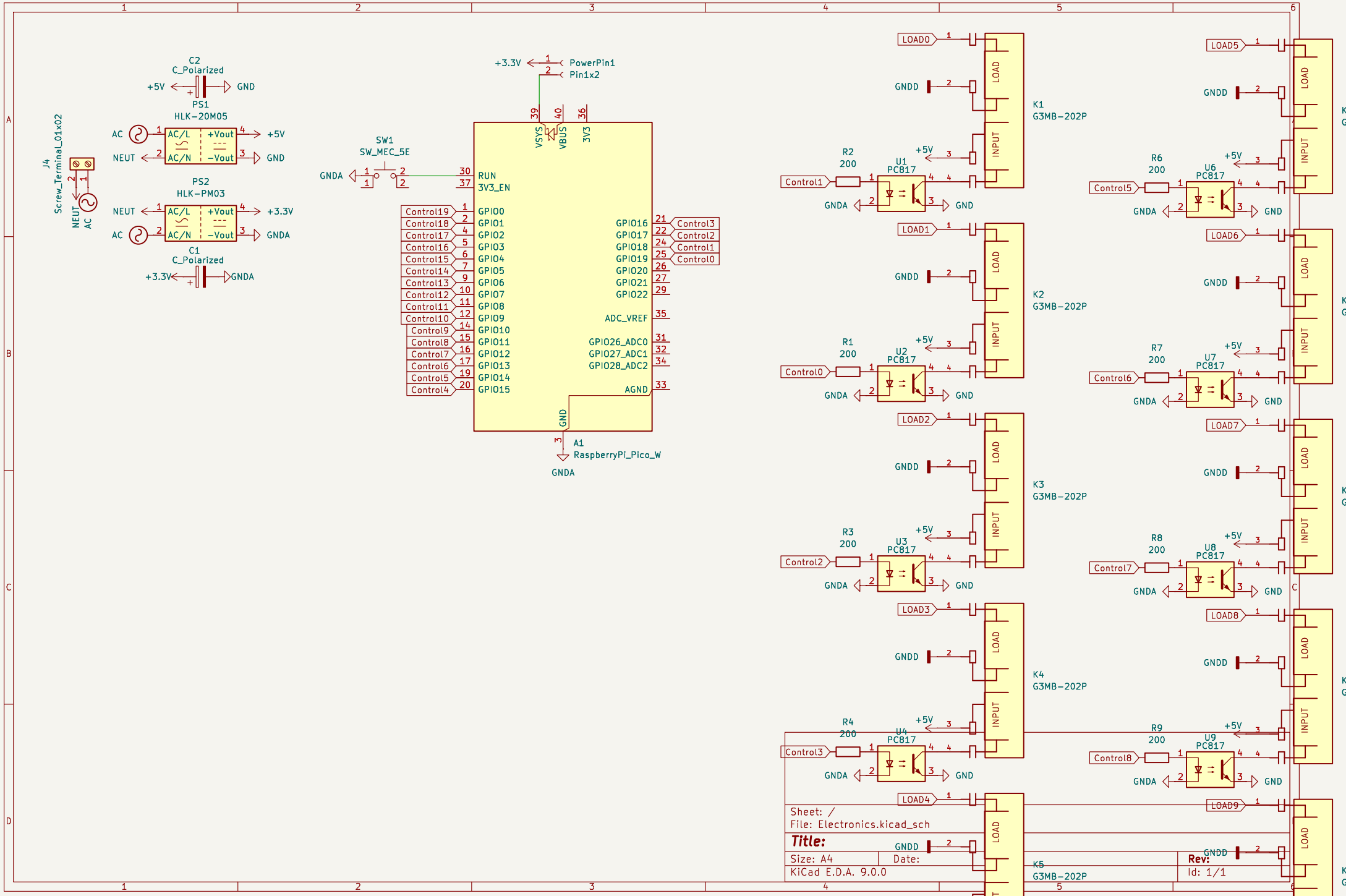
C2
C_Polarized
+5V
GND
PS1
HLK-20M05
AC
NEUT
AC/L
AC/N
+Vout
-Vout
J4
Screw_Terminal_01x02
PS2
HLK-PM03
+3.3V
GNDA
C1
SW1
SW_MEC_5E
PowerPin1
Pin1x2
VSYS
VBUS
3V3
RUN
3V3_EN
GPIO0
GPIO1
GPIO2
GPIO3
GPIO4
GPIO5
GPIO6
GPIO7
GPIO8
GPIO9
GPIO10
GPIO11
GPIO12
GPIO13
GPIO14
GPIO15
GPIO16
GPIO17
GPIO18
GPIO19
GPIO20
GPIO21
GPIO22
ADC_VREF
GPIO26_ADC0
GPIO27_ADC1
GPIO28_ADC2
AGND
A1
RaspberryPi_Pico_W
Control0
Control1
Control2
Control3
Control4
Control5
Control6
Control7
Control8
Control9
Control10
Control11
Control12
Control13
Control14
Control15
Control16
Control17
Control18
Control19
LOAD0
LOAD1
LOAD2
LOAD3
LOAD4
LOAD5
LOAD6
LOAD7
LOAD8
LOAD9
GNDD
LOAD
INPUT
K1
G3MB-202P
K2
G3MB-202P
K3
G3MB-202P
K4
G3MB-202P
K5
G3MB-202P
R1
R2
R3
R4
R5
R6
R7
R8
R9
R10
200
U1
U2
U3
U4
U5
U6
U7
U8
U9
U10
PC817
Sheet: /
File: Electronics.kicad_sch
Title:
Size: A4
Date:
KiCad E.D.A. 9.0.0
Rev:
Id: 1/1