Edit symbol table and remove power/voltage from parts where the "field4" is hidden.

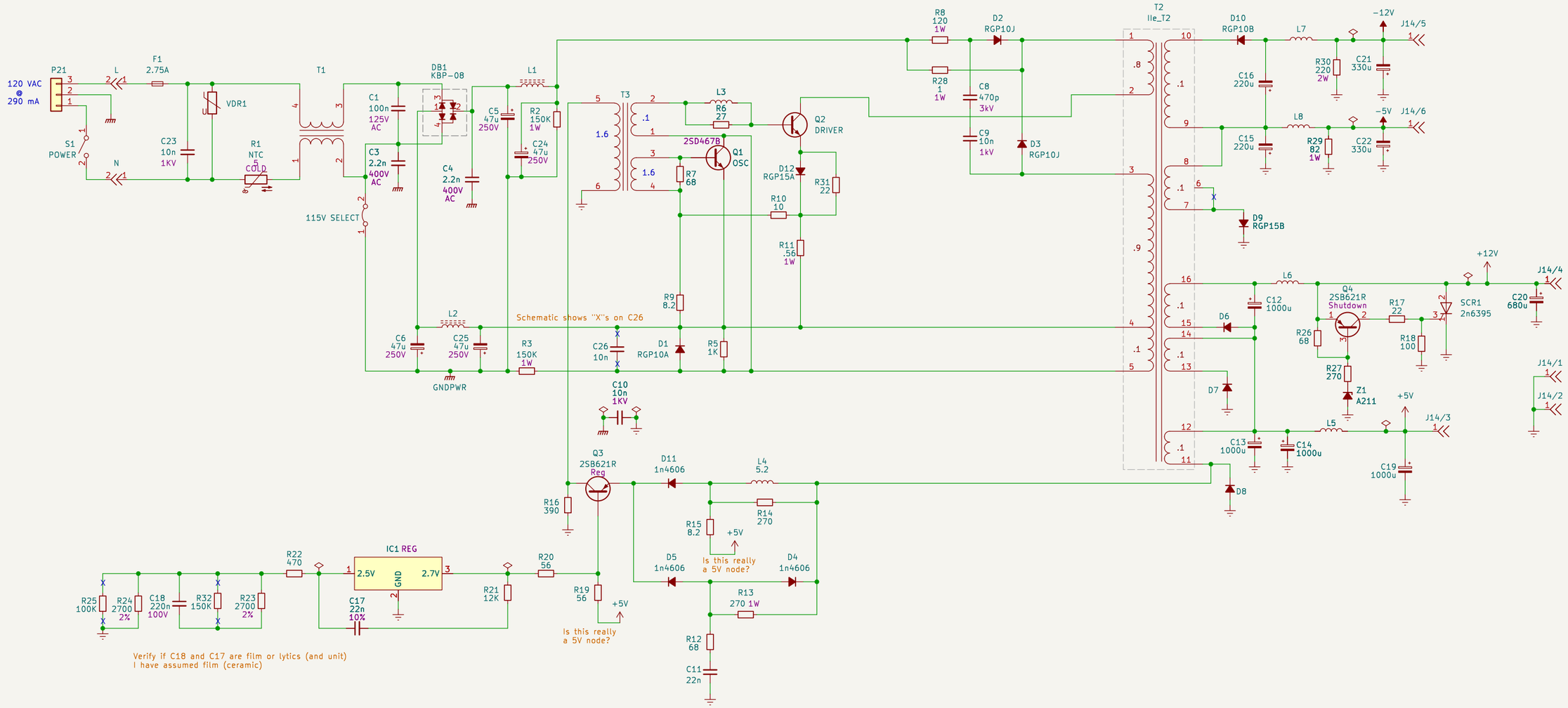


v1 Recreated by James Lewis (@baldengineer)
Reference: Sams Computerfacts Apple IIe AS2064
**bald.ee/bitpreserve**

Sheet: /
File: Apple IIe Power Supply UNKNOWN.kicad_sch

**Title: Apple IIe Power Supply**

| | | |
|---|---|---|
| Size: A3 | Date: 2024-01-11 | **Rev: 1** |
| KiCad E.D.A. 9.0.0 | | Id: 1/1 |