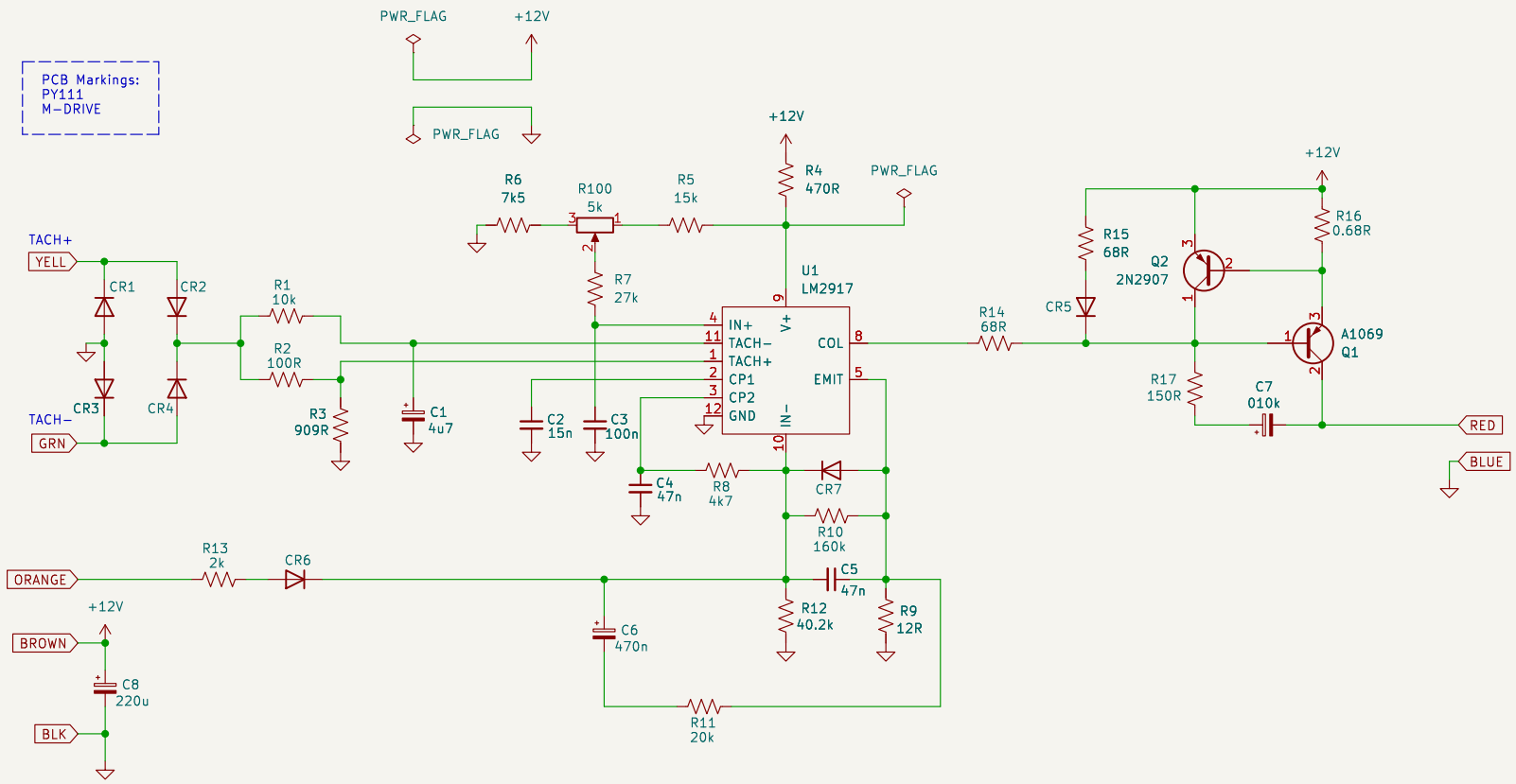

Component references are different to schematics online
A2M0003

Sheet: /
File: speed-controller.kicad_sch

Title: Apple Disk Drive II Speed Sensor PCB

Size: A4	Date:	Rev:
KiCad E.D.A. 9.0.0		Id: 1/1