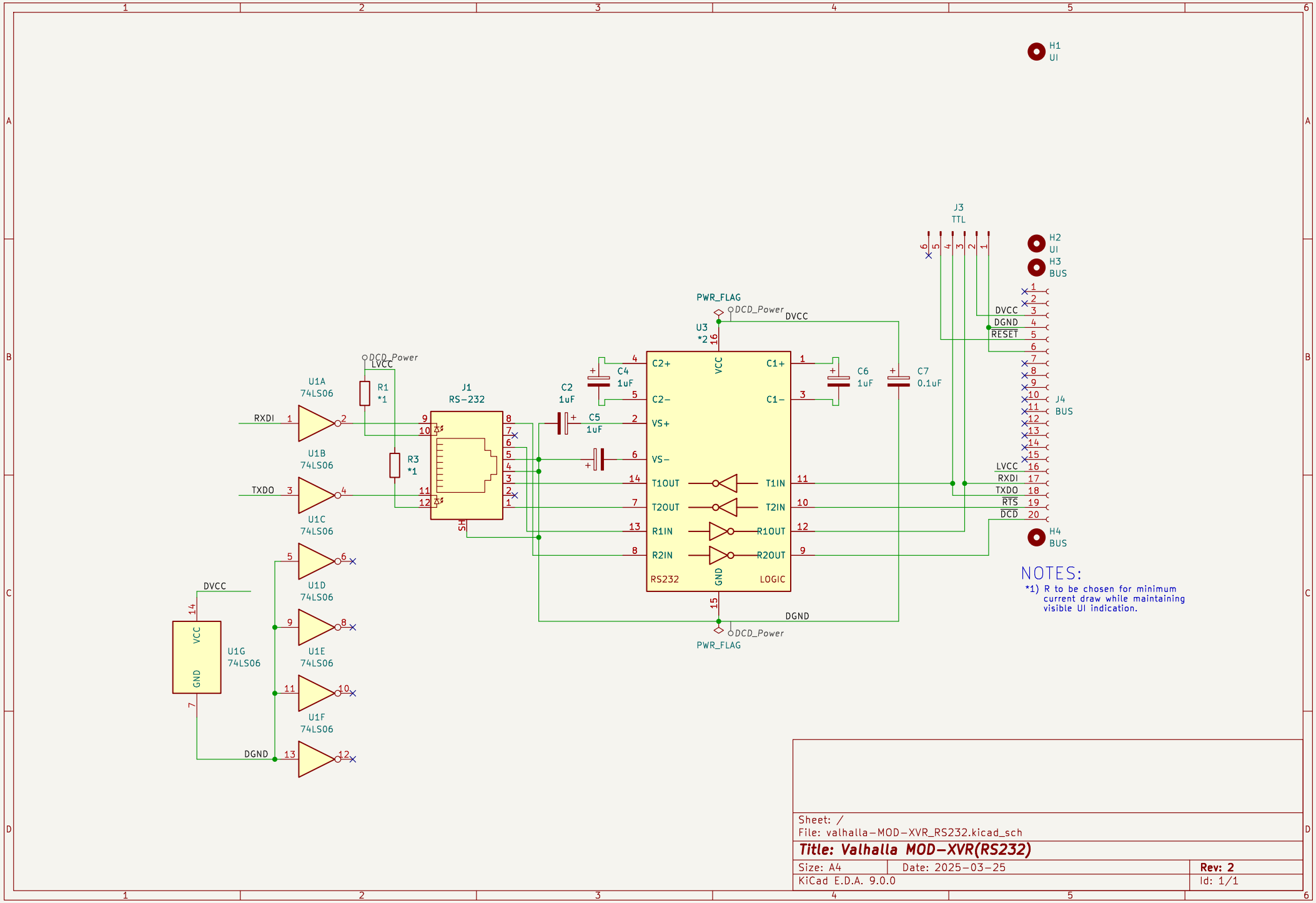

Sheet: /
File: valhalla-MOD-XVR_RS232.kicad_sch

Title: Valhalla MOD-XVR(RS232)

Size: A4	Date: 2025-03-25	**Rev: 2**
KiCad E.D.A. 9.0.0		Id: 1/1