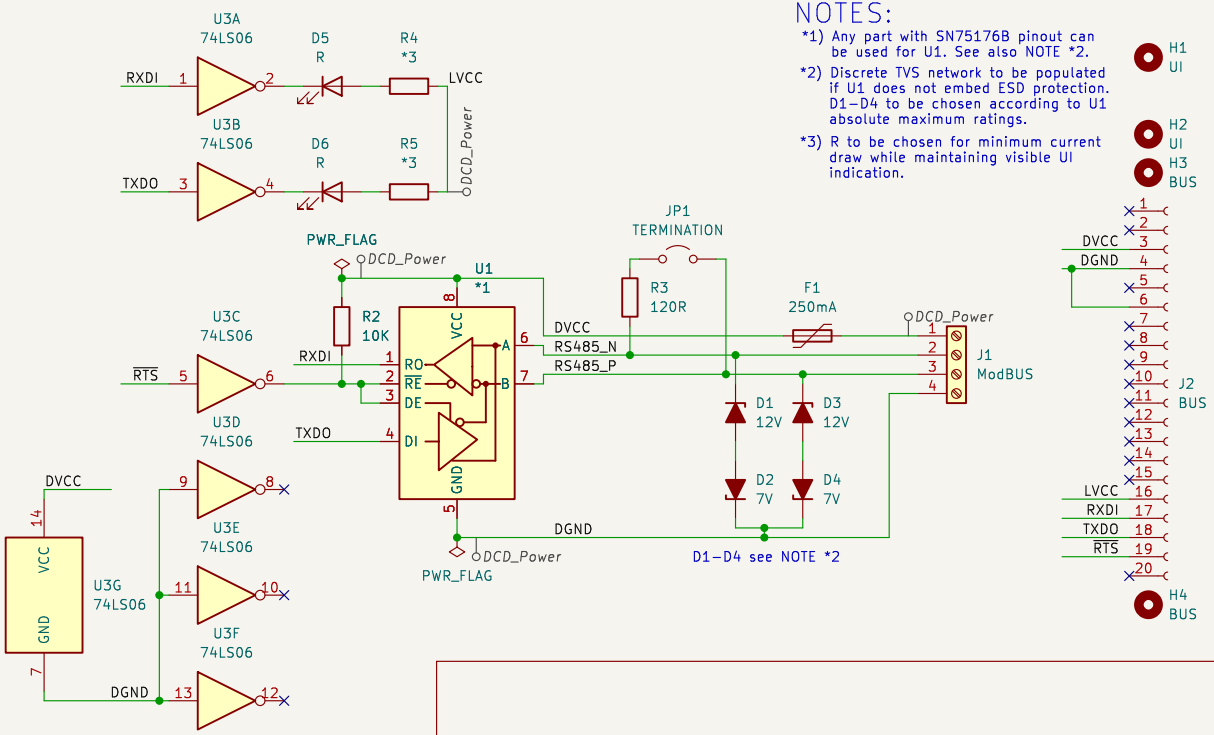

Sheet: /
File: valhalla–MOD–XVR_RS485.kicad_sch

Title: Valhalla MOD–XVR(RS485)

Size: A5	Date: 2025–03–25	Rev: 2
KiCad E.D.A. 9.0.0		Id: 1/1