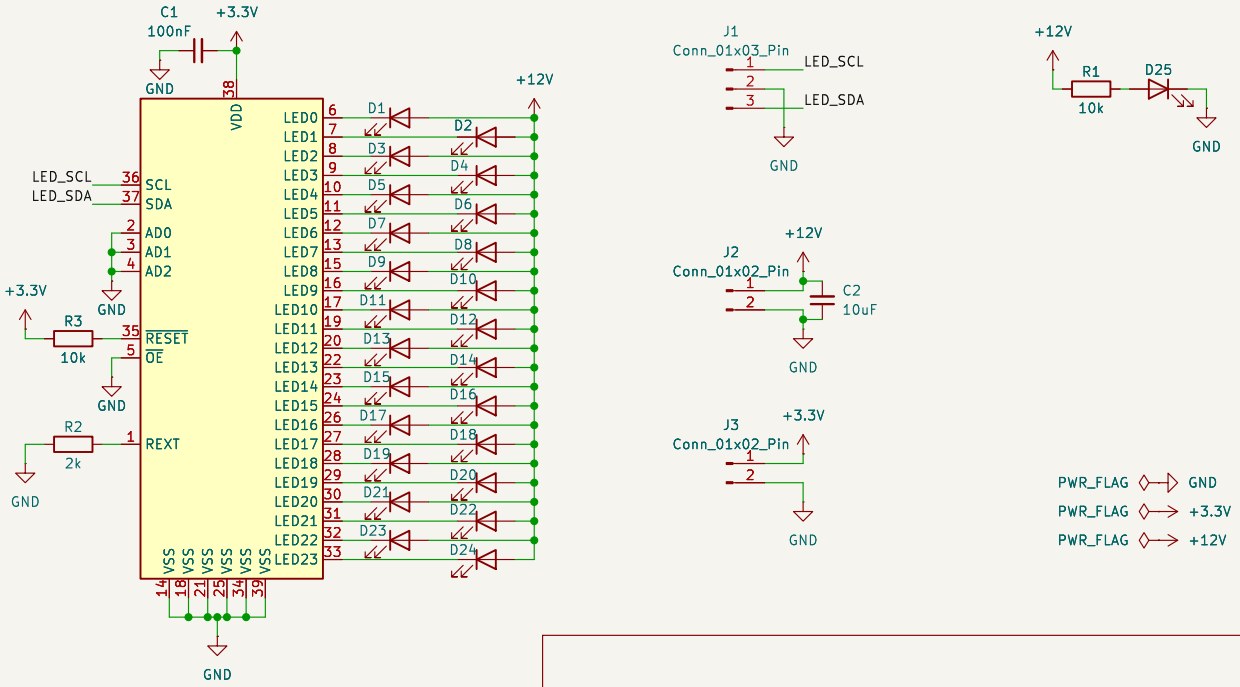

Mountjoy Modular

Sheet: /

File: Spectralist_LEDs.kicad_sch

Title: Spectralist LED board

Size: A5	Date: 2025-01-17	**Rev:**
KiCad E.D.A. 9.0.0		Id: 1/1