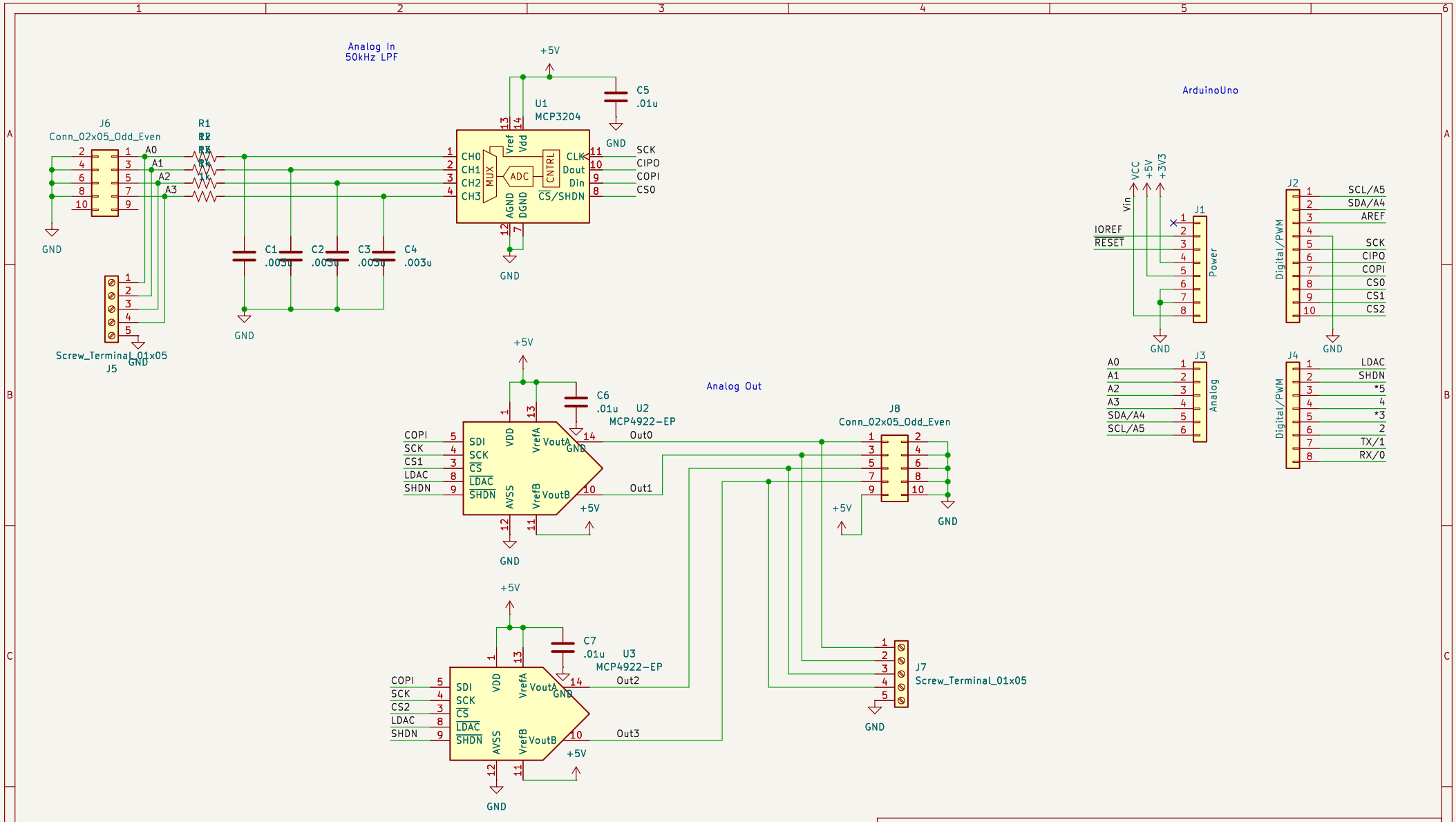

* Indicates a PWM-capable pin

Sheet: /
File: arduino_shield.kicad_sch

Title:

Size: A4	Date: mar. 31 mars 2015	Rev:
KiCad E.D.A. 9.0.0		Id: 1/1