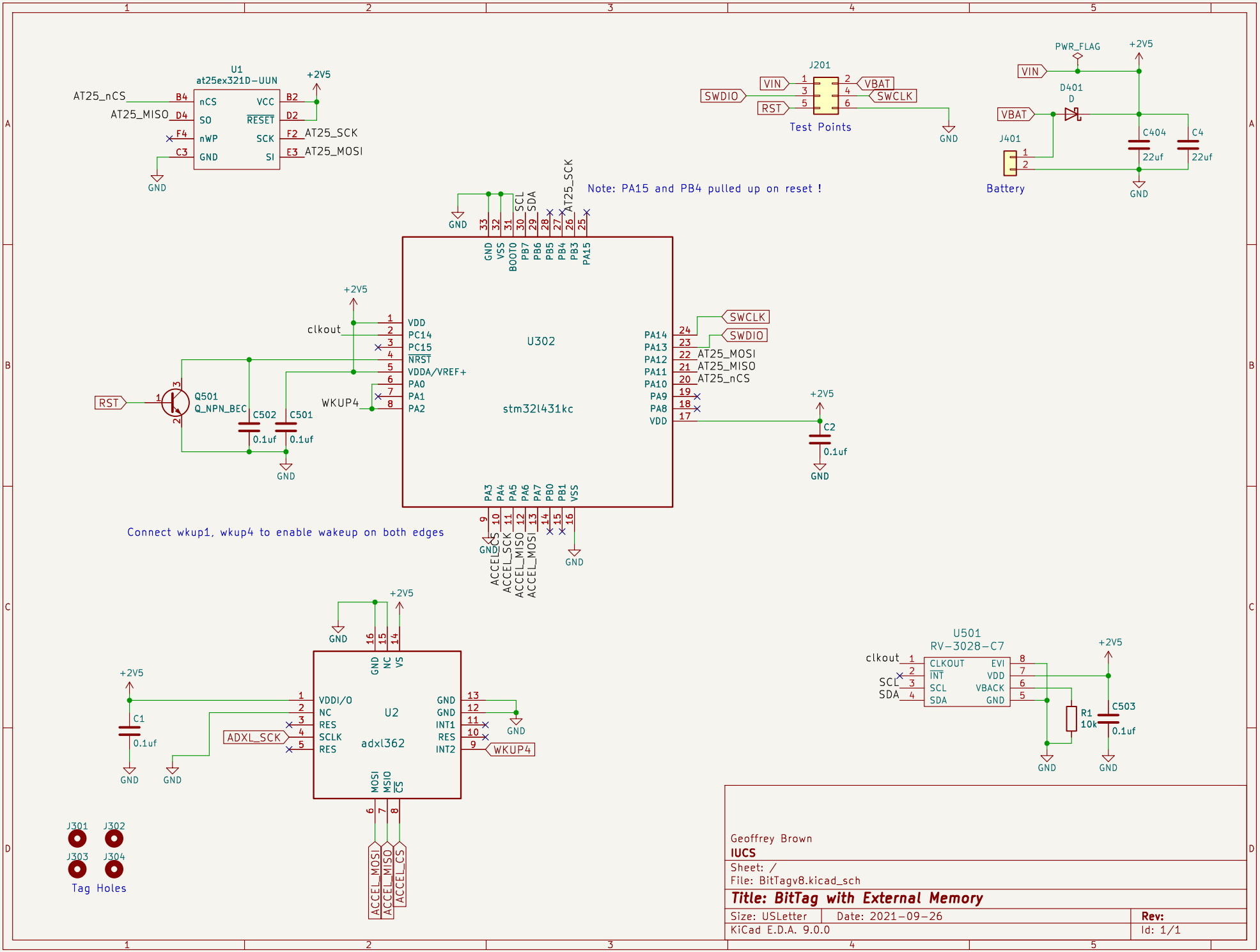

Geoffrey Brown
IUCS
Sheet: /
File: BitTagv8.kicad_sch

Title: BitTag with External Memory

Size: USLetter	Date: 2021-09-26	**Rev:**
KiCad E.D.A. 9.0.0		Id: 1/1