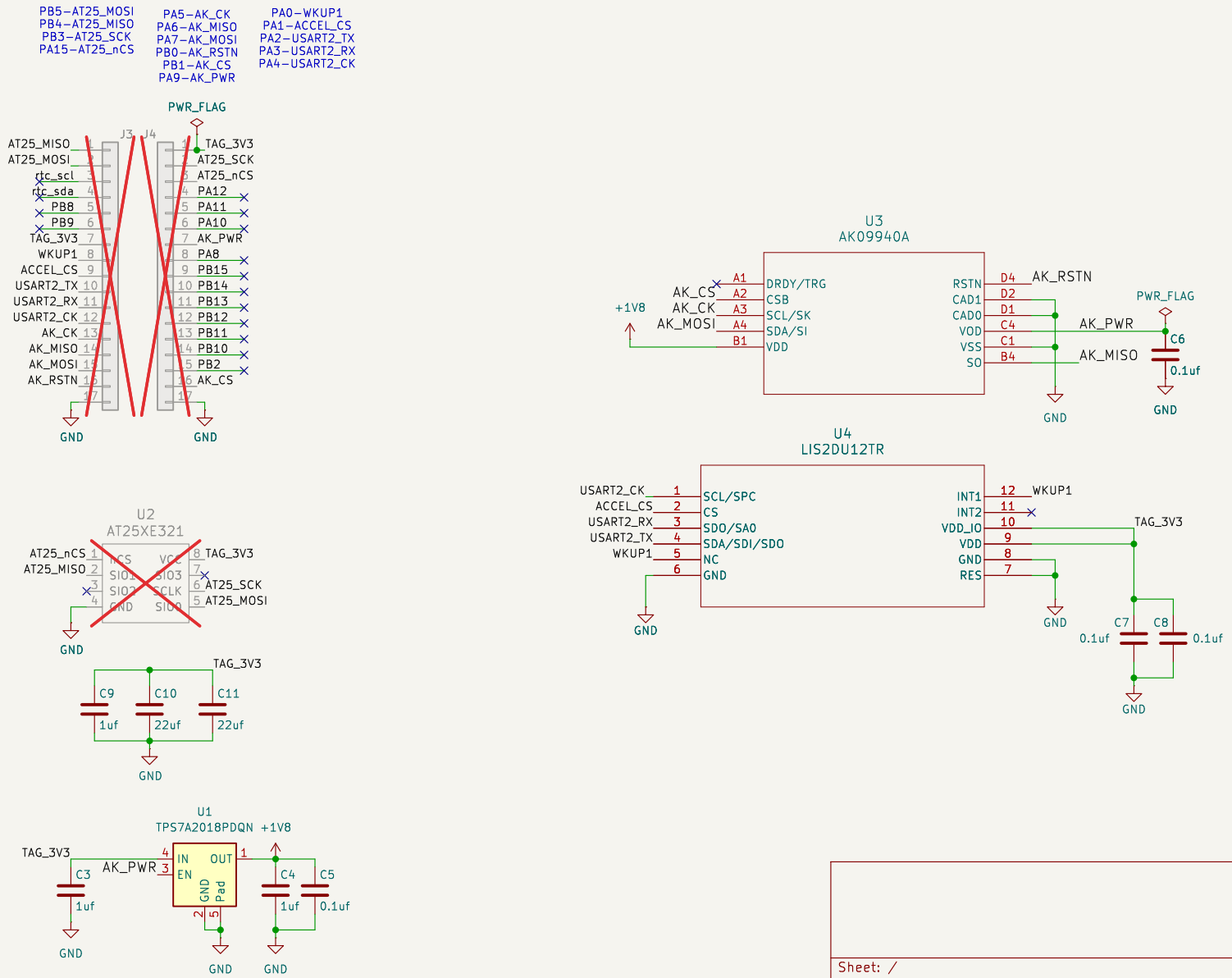

Sheet: /
File: CompassTagBreakout.kicad_sch

Title: Compass Tag Breakout

Size: A	Date: 2025-04-25	Rev:
KiCad E.D.A. 9.0.0		Id: 1/1