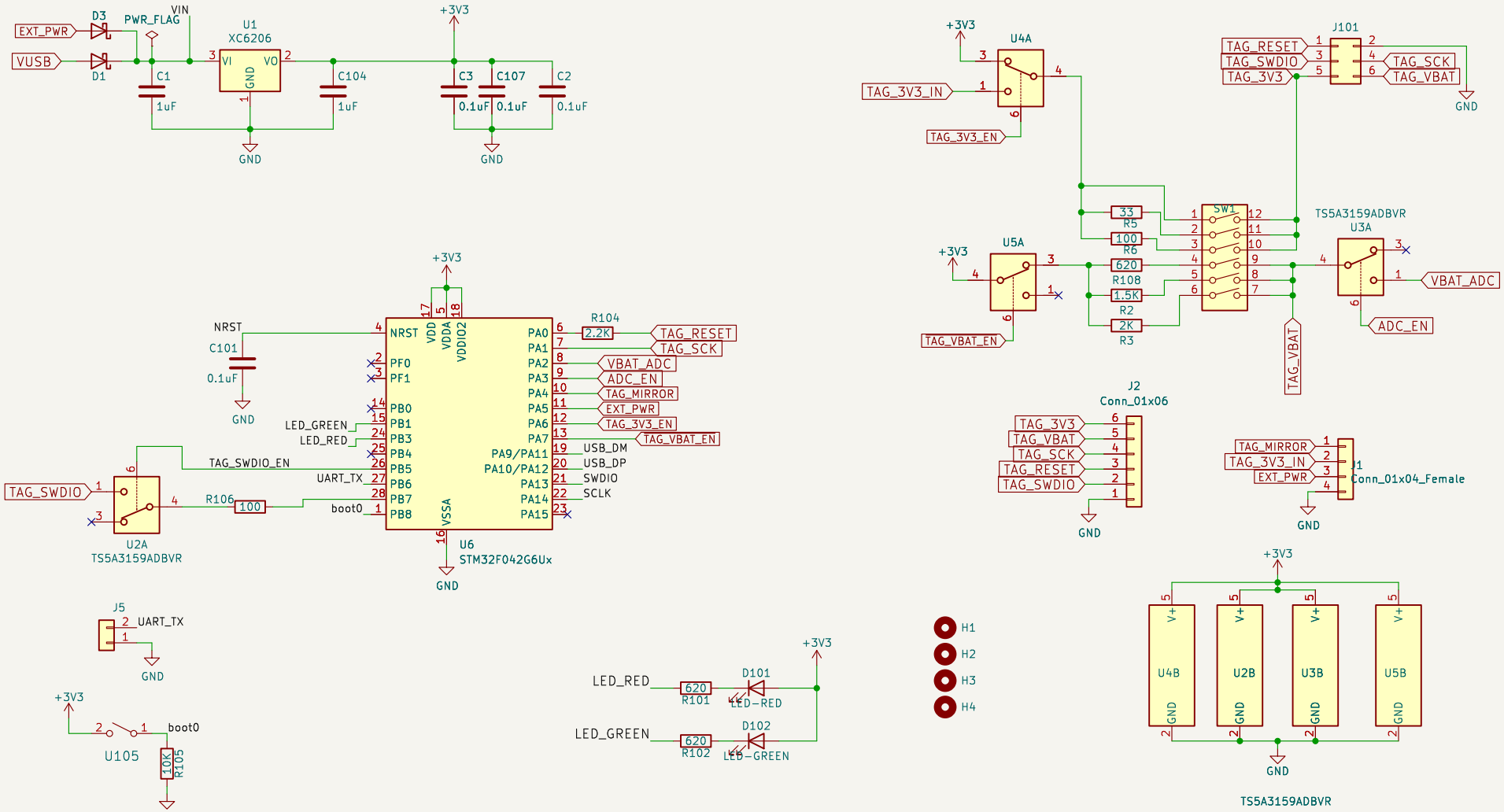

Sheet: /
File: tagbase-v7.kicad_sch

Title: BitTag Base for JLCPCB fab v7

Size: USLetter	Date: 2023-05-31	Rev: 7
KiCad E.D.A. 9.0.0		Id: 1/1