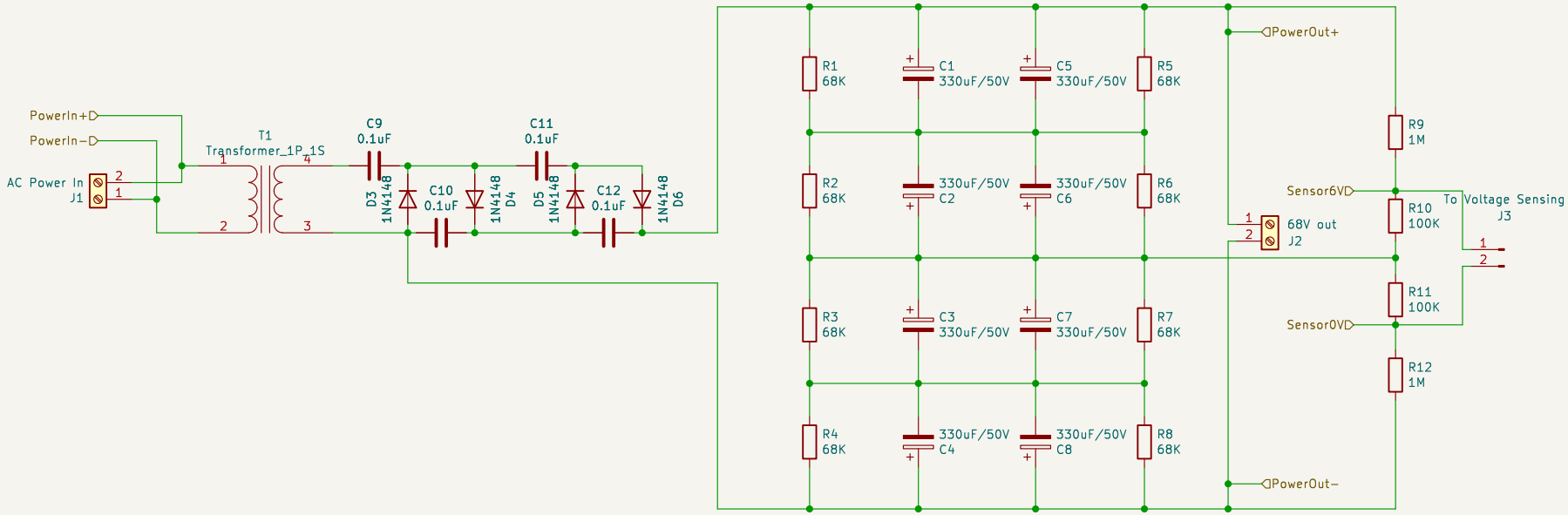

Sheet: /
File: MiniCapacitorBank.kicad_sch

Title: Mini Capacitor Bank

Size: A4	Date: 2020-01-07	**Rev: 1**
KiCad E.D.A. 9.0.0		Id: 1/1