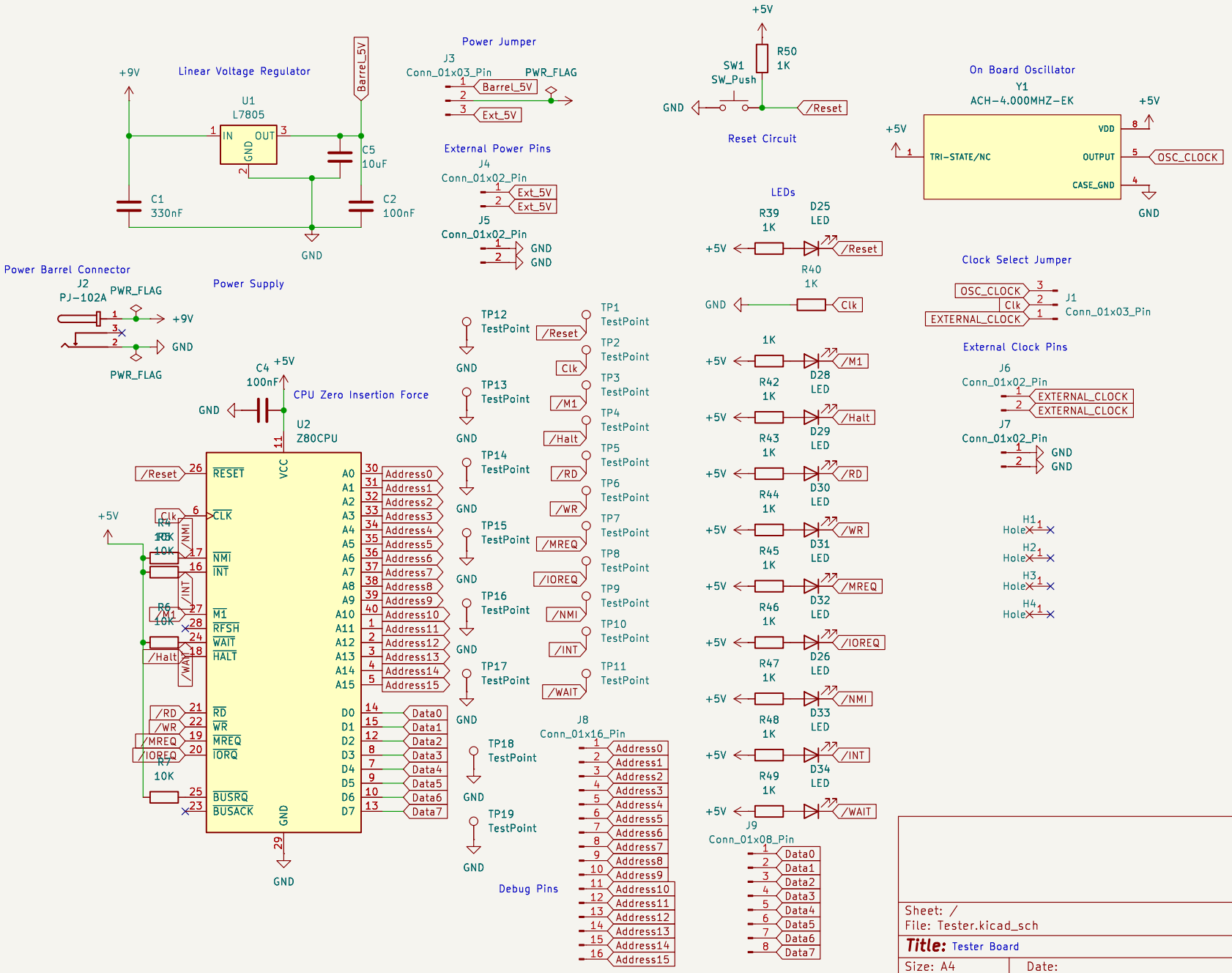


Sheet: /
File: Tester.kicad_sch

**Title:** Tester Board

| Size: A4 | Date: | Rev: |
|---|---|---|
| KiCad E.D.A. 9.0.0 | | Id: 1/2 |

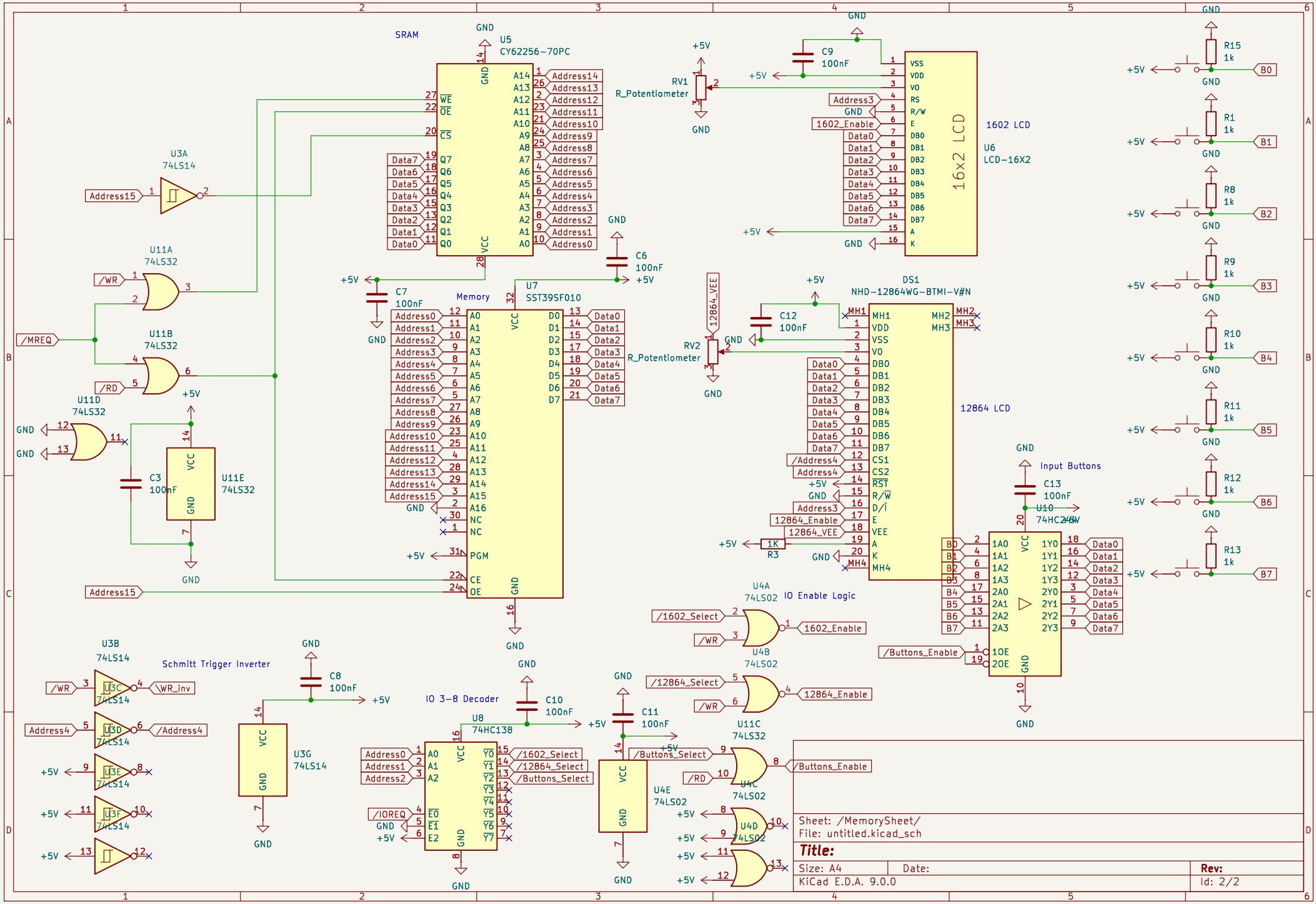
SRAM
U5
CY62256-70PC
U3A
74LS14
U11A
74LS32
U11B
74LS32
U11D
74LS32
U11E
74LS32
C3
100nF
C7
100nF
C6
100nF
Memory
U7
SST39SF010
RV1
R_Potentiometer
C9
100nF
1602 LCD
U6
LCD-16X2
16x2 LCD
RV2
R_Potentiometer
C12
100nF
DS1
NHD-12864WG-BTMI-V#N
12864 LCD
R3
1K
Input Buttons
C13
100nF
U10
74HC244
R15
1k
R1
1k
R8
1k
R9
1k
R10
1k
R11
1k
R12
1k
R13
1k
U4A
74LS02
IO Enable Logic
U4B
74LS02
U11C
74LS32
U4C
74LS02
U4D
74LS02
U4E
74LS02
U3B
74LS14
Schmitt Trigger Inverter
U3C
74LS14
U3D
74LS14
U3E
74LS14
U3F
74LS14
U3G
74LS14
C8
100nF
IO 3-8 Decoder
U8
74HC138
C10
100nF
C11
100nF
Sheet: /MemorySheet/
File: untitled.kicad_sch
Title:
Size: A4
Date:
Rev:
KiCad E.D.A. 9.0.0
Id: 2/2