NOTES: (UNLESS OTHERWISE SPECIFIED)

1) xxxx

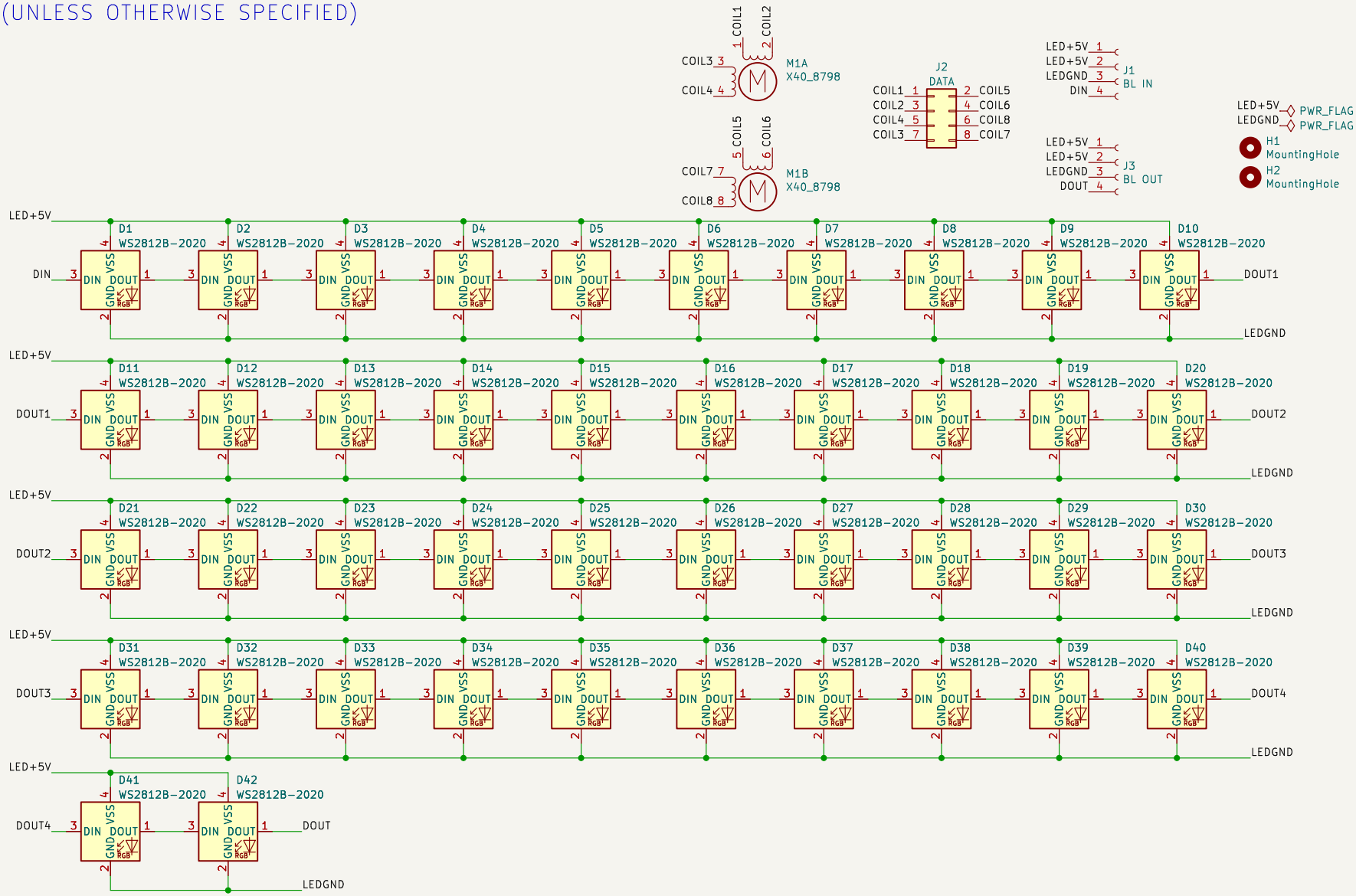

CC BY-NC-SA

www.OpenHornet.com

Sheet: /

File: GAUGE_Dual Needle Instruments.kicad_sch

Title: DUAL NEEDLE GAUGE

Size: A	Date: 2021-11-06	Rev: 1
KiCad E.D.A. 9.0.0		Id: 1/1