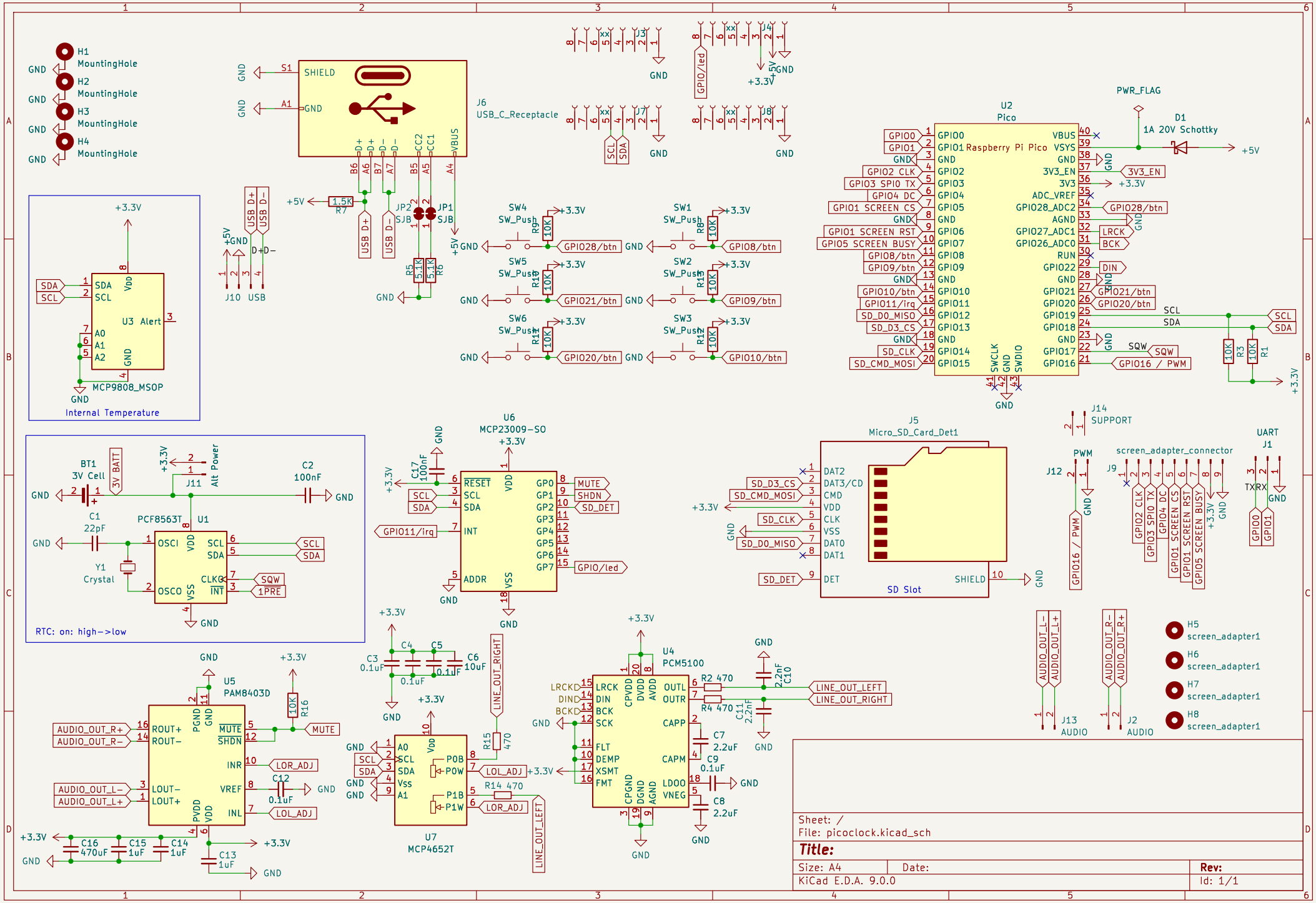
H1 MountingHole
H2 MountingHole
H3 MountingHole
H4 MountingHole
J6 USB_C_Receptacle
SHIELD
J10 USB
JP1 SJB
JP2 SJB
R5 5.1K
R6 5.1K
R7 1.5K
U2 Pico
Raspberry Pi Pico
PWR_FLAG
D1 1A 20V Schottky
SW1 SW_Push
SW2 SW_Push
SW3 SW_Push
SW4 SW_Push
SW5 SW_Push
SW6 SW_Push
U3 Alert
MCP9808_MSOP
Internal Temperature
BT1 3V Cell
J11 Alt Power
C2 100nF
C1 22pF
Y1 Crystal
U1 PCF8563T
RTC: on: high->low
U6 MCP23009-SO
J5 Micro_SD_Card_Det1
SD Slot
J14 SUPPORT
J12 PWM
J9 screen_adapter_connector
J1 UART
U5 PAM8403D
U7 MCP4652T
U4 PCM5100
J13 AUDIO
J2 AUDIO
H5 screen_adapter1
H6 screen_adapter1
H7 screen_adapter1
H8 screen_adapter1
Sheet: /
File: picoclock.kicad_sch
Title:
Size: A4
Date:
Rev:
KiCad E.D.A. 9.0.0
Id: 1/1