Power

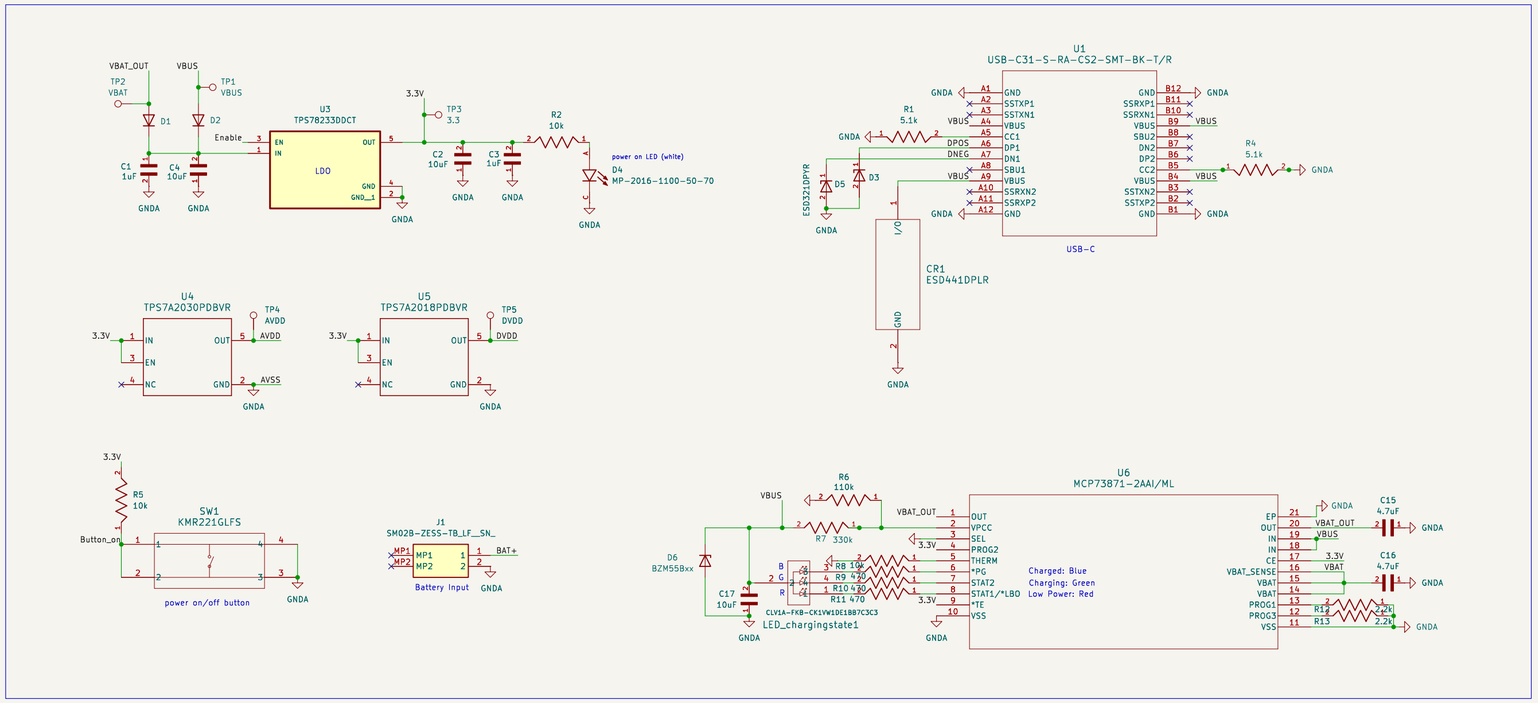

Analog Front End

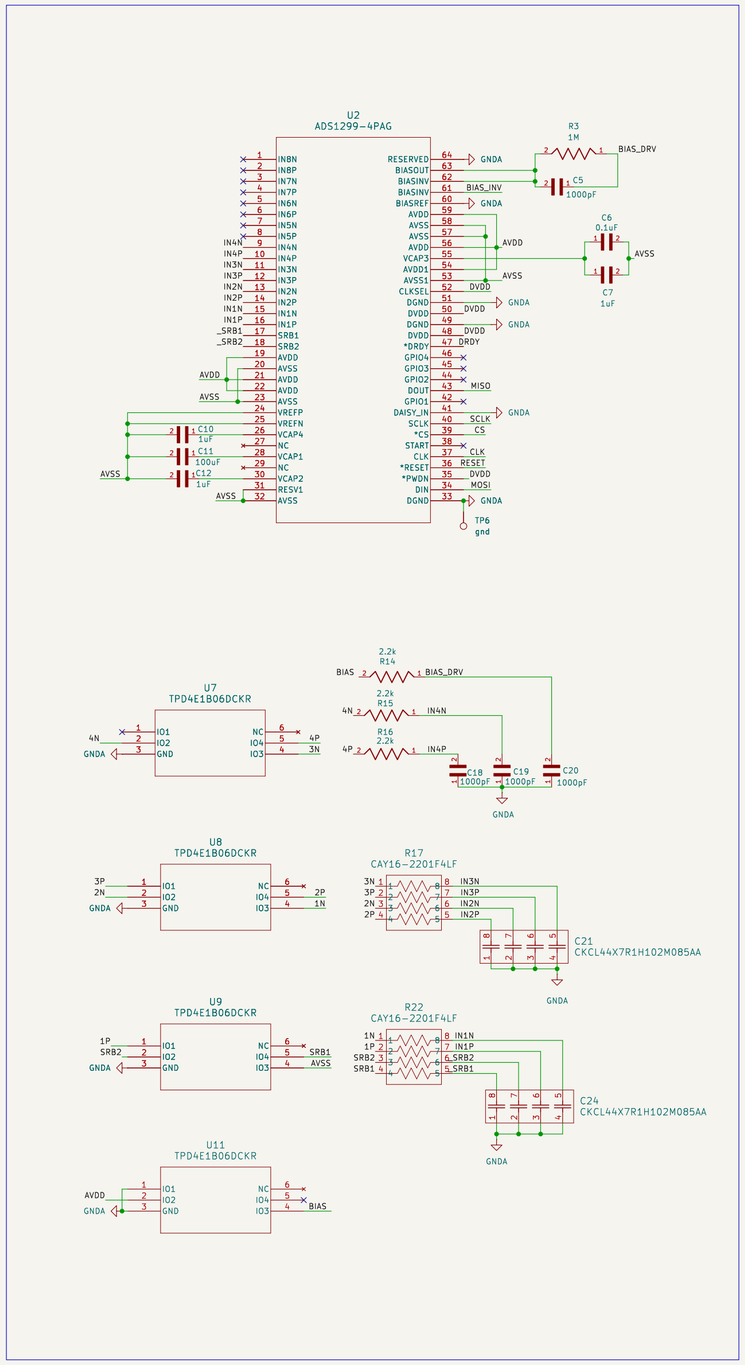

Microcontroller Unit

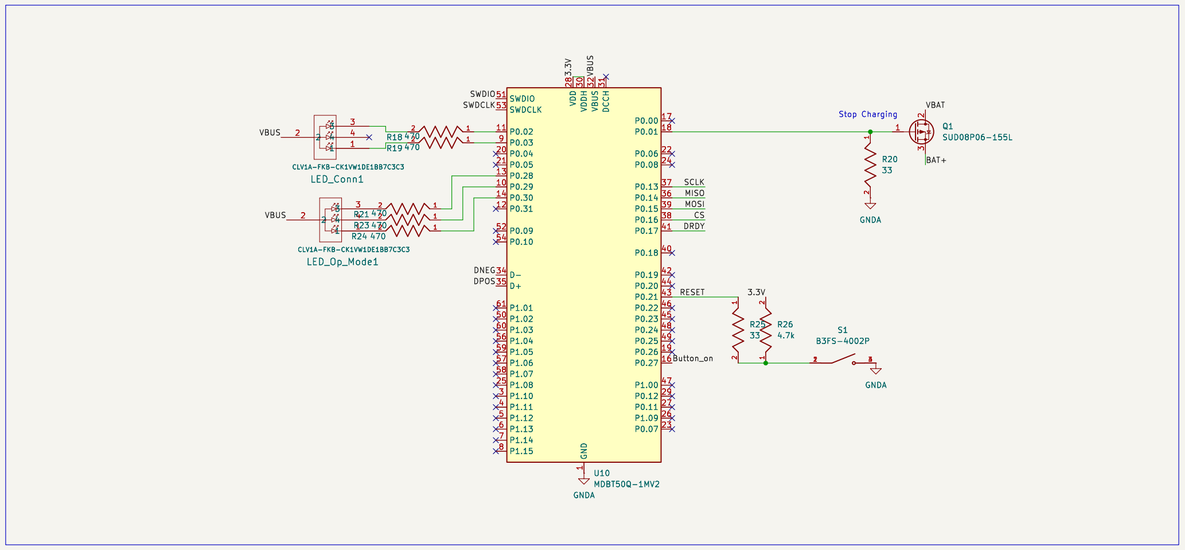

Input Connector

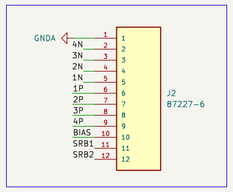

SWD Programming Pins

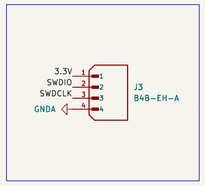

Sheet: /		
File: BCI_0802_update.kicad_sch		
Title:		
Size: A2	Date:	**Rev:**
KiCad E.D.A. 9.0.0		Id: 1/1