ESP32-C3 epaper touch

HV boost circuit

ATTENTION: C12 is 0603
and smaller than others

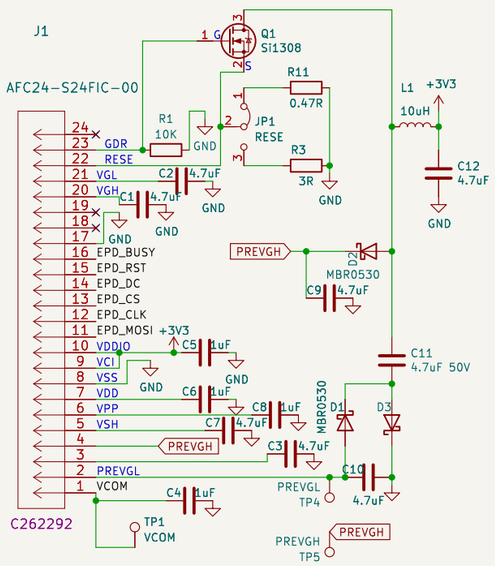

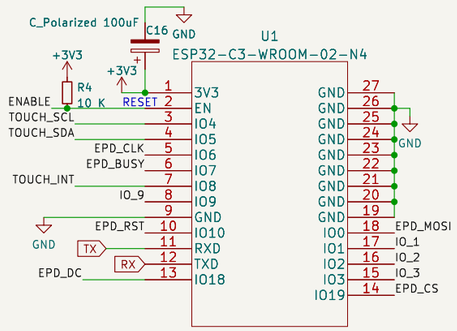

USB to UART

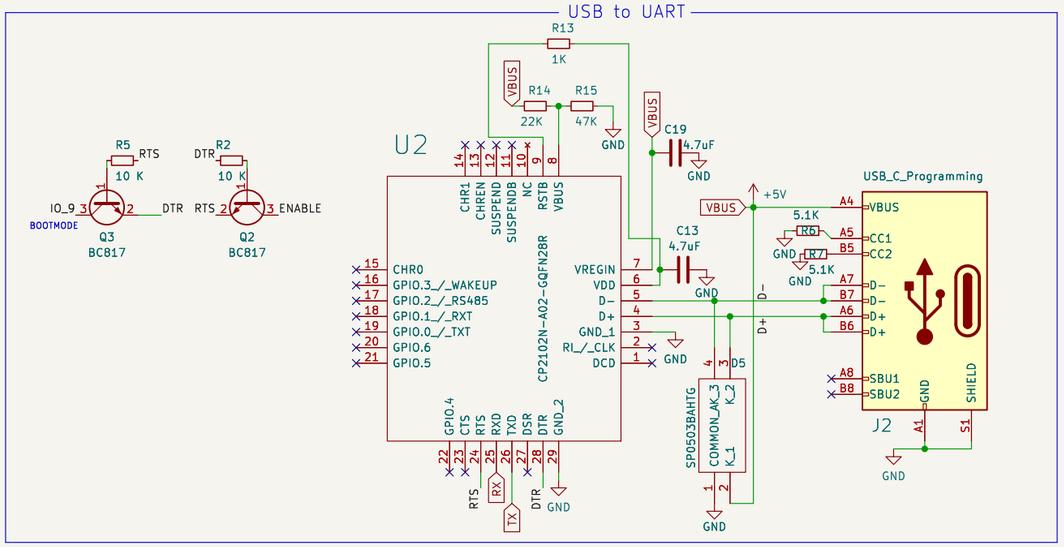

EXT. IO + POWER IN

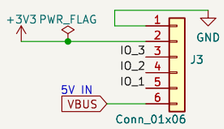

Mounting w/ wall switch

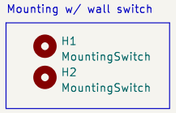

VBUS to 3.3V LDO

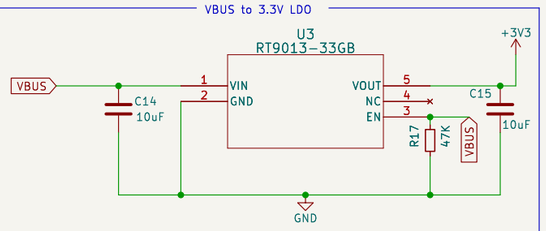

Real time clock via I2C

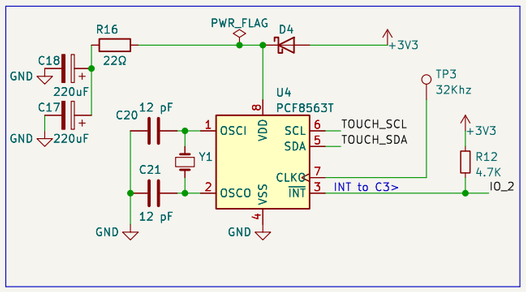

6 FPC Touch I2C connector

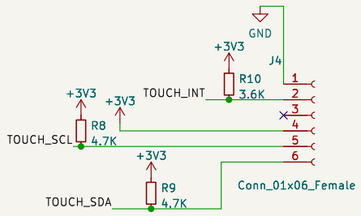

Groove I2C connector

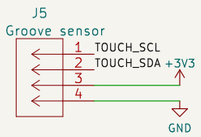

Revision LOGs

REV DESCRIPTION
1.2 R12 RTC interrupt pull-up now changed to 4K7
Added R16 22Ω currrent limiter to charge RTC backup capacitors
IMPORTANT: D6 to prevent LDO leak current backwards to UART (reducing in 4mA deepsleep)
1.1 C3 working PCB only one issue found: RTC INT pull-up 10K is reporting always LOW
1.0 Initial version with many Harware errors (MOSI routed to IO9, that needs to be pull-up in BOOT)

IMPORTANT: If used as an ON / OFF switch
it should NOT be used in any case for machinery that is for medical use or
industrial heavy load devices. This an experimental switch that should only
be used in home appliances with no more than 200 Watts top consumption.

Sheet: /
File: C3-27-epaper-touch.kicad_sch

Title: ESP32-C3 epaper controller with touch

Size: A3	Date: 2022-11-22	Rev: 1.2
KiCad E.D.A. 9.0.0		Id: 1/1