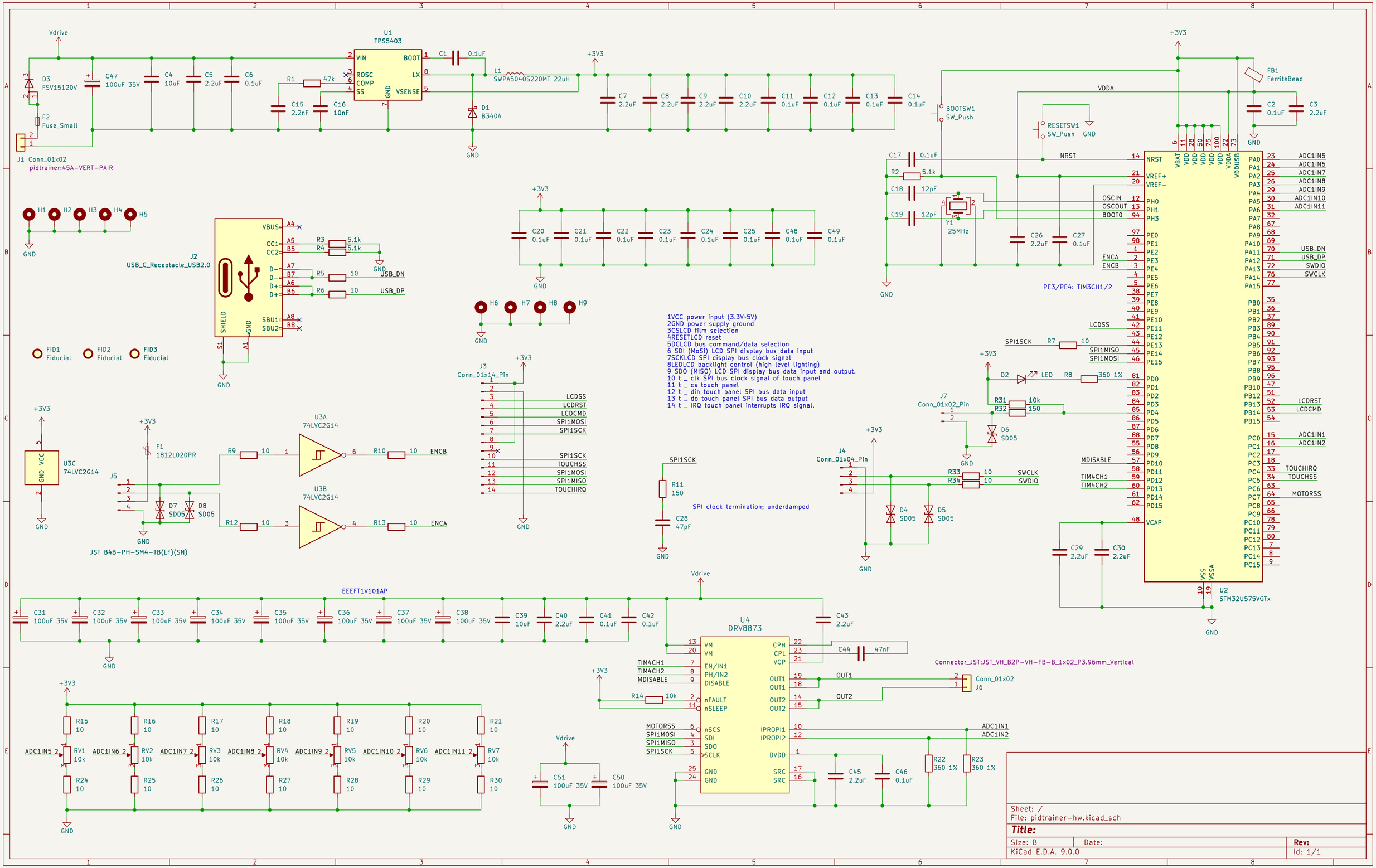
Vdrive
D3 FSV15120V
C47 100uF 35V
C4 10uF
C5 2.2uF
C6 0.1uF
F2 Fuse_Small
J1 Conn_01x02
pidtrainer:45A-VERT-PAIR
U1 TPS5403
VIN
ROSC
COMP
SS
BOOT
LX
VSENSE
GND
R1 47k
C15 2.2nF
C16 10nF
C1 0.1uF
L1 SWPA5040S220MT 22uH
D1 B340A
+3V3
C7 2.2uF
C8 2.2uF
C9 2.2uF
C10 2.2uF
C11 0.1uF
C12 0.1uF
C13 0.1uF
C14 0.1uF
BOOTSW1 SW_Push
RESETSW1 SW_Push
FB1 FerriteBead
C2 0.1uF
C3 2.2uF
VDDA
NRST
C17 0.1uF
R2 5.1k
C18 12pF
C19 12pF
Y1 25MHz
OSCIN
OSCOUT
BOOT0
C26 2.2uF
C27 0.1uF
ENCA
ENCB
PE3/PE4: TIM3CH1/2
H1 H2 H3 H4 H5
J2 USB_C_Receptacle_USB2.0
VBUS
CC1
CC2
D-
D+
SBU1
SBU2
SHIELD
R3 5.1k
R4 5.1k
R5 10
R6 10
USB_DN
USB_DP
FID1 Fiducial
FID2 Fiducial
FID3 Fiducial
C20 0.1uF
C21 0.1uF
C22 0.1uF
C23 0.1uF
C24 0.1uF
C25 0.1uF
C48 0.1uF
C49 0.1uF
H6 H7 H8 H9
1VCC power input (3.3V-5V)
2GND power supply ground
3CSLCD film selection
4RESETLCD reset
5DCLCD bus command/data selection
6 SDI (MoSI) LCD SPI display bus data input
7SCKLCD SPI display bus clock signal
8LEDLCD backlight control (high level lighting)
9 SDO (MISO) LCD SPI display bus data input and output.
10 t _ clk SPI bus clock signal of touch panel
11 t _ cs touch panel
12 t _ din touch panel SPI bus data input
13 t _ do touch panel SPI bus data output
14 t _ IRQ touch panel interrupts IRQ signal.
J3 Conn_01x14_Pin
LCDSS
LCDRST
LCDCMD
SPI1MOSI
SPI1SCK
SPI1SCK
TOUCHSS
SPI1MOSI
SPI1MISO
TOUCHIRQ
SPI1SCK
R11 150
C28 47pF
SPI clock termination; underdamped
SPI1SCK
R7 10
SPI1MISO
SPI1MOSI
D2 LED
R8 360 1%
J7 Conn_01x02_Pin
R31 10k
R32 150
D6 SD05
J4 Conn_01x04_Pin
R33 10
R34 10
SWCLK
SWDIO
D4 SD05
D5 SD05
LCDSS
MDISABLE
TIM4CH1
TIM4CH2
LCDRST
LCDCMD
TOUCHIRQ
TOUCHSS
MOTORSS
ADC1IN5
ADC1IN6
ADC1IN7
ADC1IN8
ADC1IN9
ADC1IN10
ADC1IN11
USB_DN
USB_DP
SWDIO
SWCLK
ADC1IN1
ADC1IN2
C29 2.2uF
C30 2.2uF
U2 STM32U575VGTx
VBAT
VDD
VDDA
VDDUSB
VSS
VSSA
VCAP
U3C 74LVC2G14
VCC
GND
F1 1812L020PR
J5
JST B4B-PH-SM4-TB(LF)(SN)
D7 SD05
D8 SD05
U3A 74LVC2G14
U3B 74LVC2G14
R9 10
R10 10
R12 10
R13 10
ENCB
ENCA
EEEFT1V101AP
C31 100uF 35V
C32 100uF 35V
C33 100uF 35V
C34 100uF 35V
C35 100uF 35V
C36 100uF 35V
C37 100uF 35V
C38 100uF 35V
C39 10uF
C40 2.2uF
C41 0.1uF
C42 0.1uF
C43 2.2uF
U4 DRV8873
VM
EN/IN1
PH/IN2
DISABLE
nFAULT
nSLEEP
nSCS
SDI
SDO
SCLK
GND
CPH
CPL
VCP
OUT1
OUT2
IPROPI1
IPROPI2
DVDD
SRC
C44 47nF
R14 10k
C45 2.2uF
C46 0.1uF
R22 360 1%
R23 360 1%
Connector_JST:JST_VH_B2P-VH-FB-B_1x02_P3.96mm_Vertical
Conn_01x02
J6
R15 10
R16 10
R17 10
R18 10
R19 10
R20 10
R21 10
RV1 10k
RV2 10k
RV3 10k
RV4 10k
RV5 10k
RV6 10k
RV7 10k
R24 10
R25 10
R26 10
R27 10
R28 10
R29 10
R30 10
C51 100uF 35V
C50 100uF 35V
Sheet: /
File: pidtrainer-hw.kicad_sch
Title:
Size: B
Date:
Rev:
KiCad E.D.A. 9.0.0
Id: 1/1