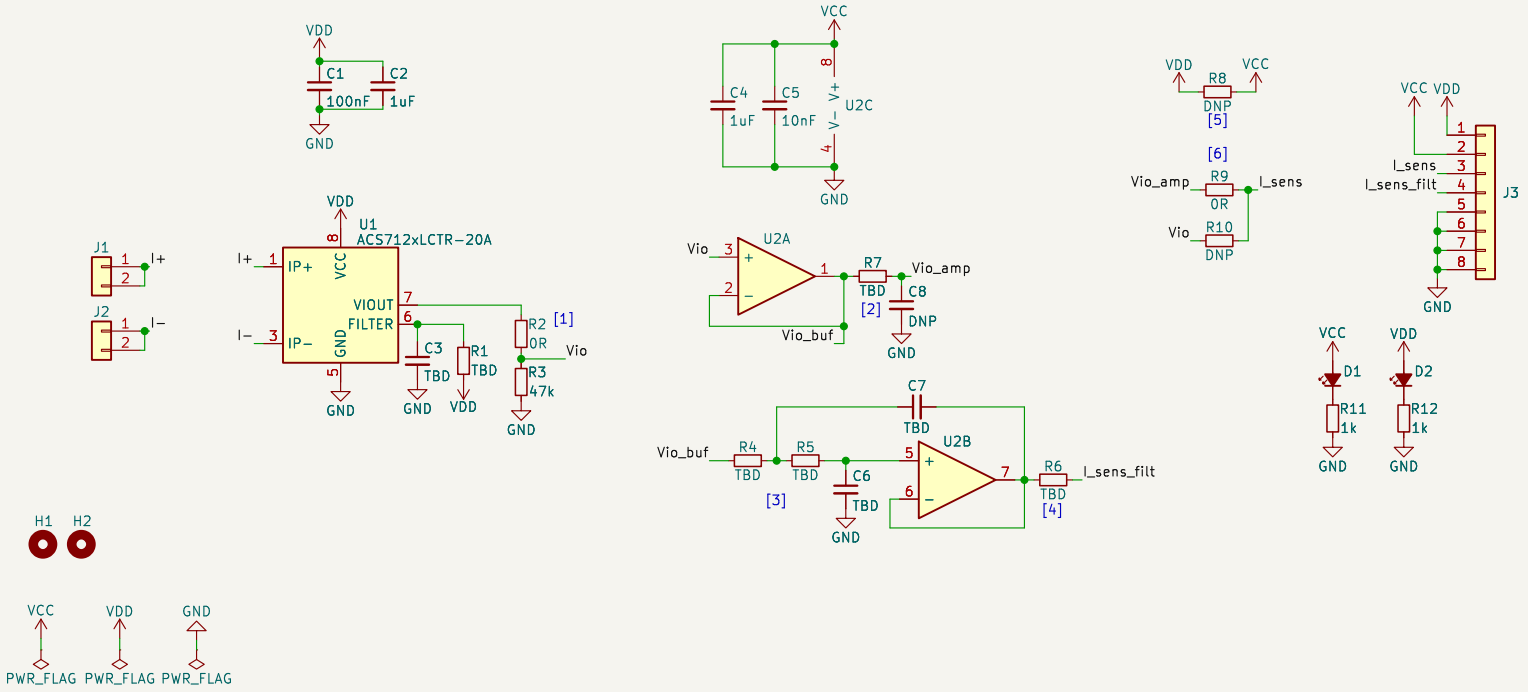

[1] This voltage divider has two purposes. The first one is to allow measuring the sensor's output with the amplifier, when Vdd and Vcc are different, and Vdd > Vcc. The second purpose, in case Vdd = Vcc, is to have a pull-down resistor to present some kind of small load to the sensor's output. This also prevents the amplifier's input from floating. I'm not really sure whether this makes a difference or not.

[2] This RC network can be used to give some kind of low pass filter at the amplifier's output. Just remember that if you use this, the output is not buffered anymore. If the RC network is not used, just R might be used to help damping oscillations at the amplifiers output, in case whatever is connected to the output is far away.

[3] 2nd order low-pass filter (Sallen-Key topology). Note that you can easily turn this in a simple first-order low-pass as well.

[4] Same purpose as [2]

[5] Vdd powers the sensor while Vcc powers the amplifier. There might be cases where the sensor needs 5 V, but the ADC that will sample the sensors only works with 3.3 V. In such cases it is better to power the amplifier with 3.3 V. In cases where the sensor and ADC can work with the same voltage, Vdd and Vcc can be the same. This resistors allow isolating or shorting Vdd and Vcc, depending on each case.

[6] If an amplifier is not required, it is possible to output the sensor's output voltage directly to the connector.

Sheet: /
File: current-sensor-acs712.kicad_sch

Title:

Size: A4	Date:	**Rev:**
KiCad E.D.A. 9.0.0		Id: 1/1