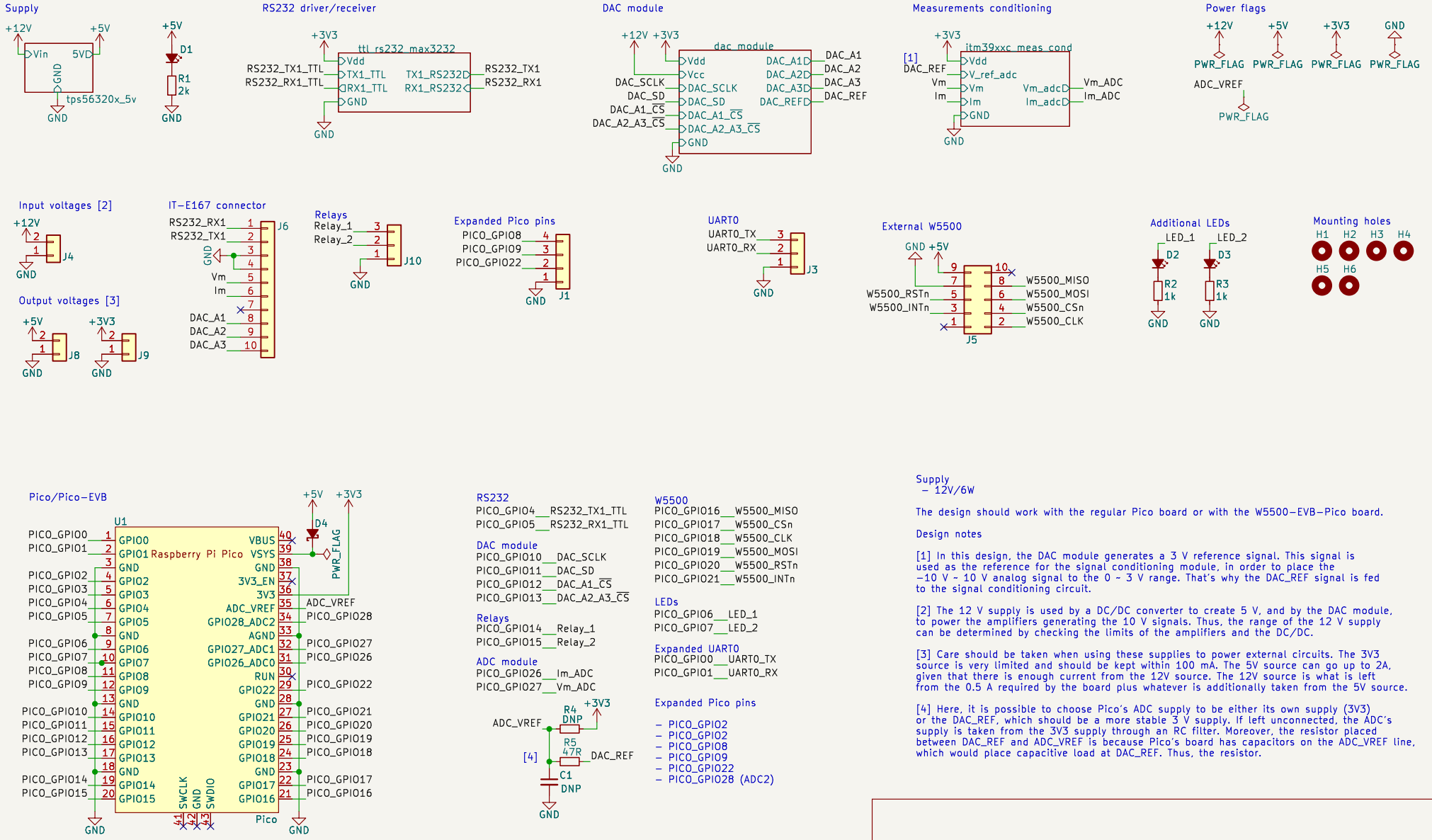

Supply
- 12V/6W

The design should work with the regular Pico board or with the W5500-EVB-Pico board.

Design notes

[1] In this design, the DAC module generates a 3 V reference signal. This signal is used as the reference for the signal conditioning module, in order to place the −10 V ~ 10 V analog signal to the 0 ~ 3 V range. That's why the DAC_REF signal is fed to the signal conditioning circuit.

[2] The 12 V supply is used by a DC/DC converter to create 5 V, and by the DAC module, to power the amplifiers generating the 10 V signals. Thus, the range of the 12 V supply can be determined by checking the limits of the amplifiers and the DC/DC.

[3] Care should be taken when using these supplies to power external circuits. The 3V3 source is very limited and should be kept within 100 mA. The 5V source can go up to 2A, given that there is enough current from the 12V source. The 12V source is what is left from the 0.5 A required by the board plus whatever is additionally taken from the 5V source.

[4] Here, it is possible to choose Pico's ADC supply to be either its own supply (3V3) or the DAC_REF, which should be a more stable 3 V supply. If left unconnected, the ADC's supply is taken from the 3V3 supply through an RC filter. Moreover, the resistor placed between DAC_REF and ADC_VREF is because Pico's board has capacitors on the ADC_VREF line, which would place capacitive load at DAC_REF. Thus, the resistor.

Sheet: /		
File: pi-pico-itm39xxc-if.kicad_sch		
Title:		
Size: A4	Date:	**Rev:**
KiCad E.D.A. 9.0.0		Id: 1/5

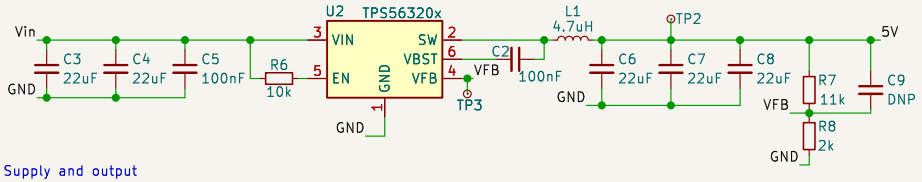

Supply and output

Vin ◁Vin
5V ▷5V
GND ◁GND

Supply info
- Input voltage: 6.7 V – 17 V
- Output voltage: 5 V
- Output current: 3 A

Compatible switching regulators:
- TPS56320x
- TPS56220x

TODO
- Make feedback resistors, output capacitors and inductor configurable from the sheet, so that it is possible to obtain any output voltage without changing values inside the sheet.

Sheet: /tps56320x_5v/
File: tps56320x_5v.kicad_sch

Title:

Size: A4	Date:	Rev:
KiCad E.D.A. 9.0.0		Id: 2/5

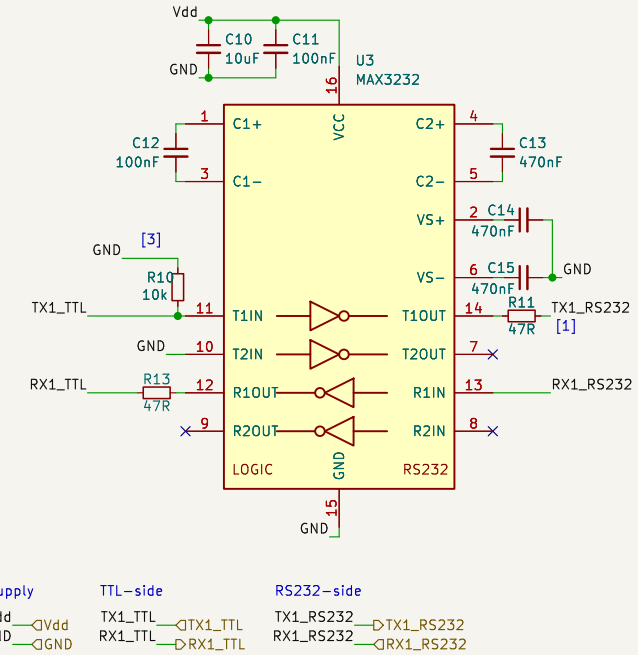

Supply info
- Input voltage (Vdd): 3 V – 5.5 V

Design notes

[1] These resistors are placed right after the signal drive to provide some kind of damping in case the line is too long.

[2] No pull-down resistors are placed here because, according to MAX3232's datasheet, the inputs already have pull-down resistors.

[3] Pull-down resistors are placed here in order to prevent the transmitters to float.

[4] These resistors would not be necessary if the host controller is on the same PCB. However, assuming that we'll maybe use this board with some jumper cables, we place these resistors here.

TODO
- Add LEDs on RX/TX lines? Which ones?

Supply		TTL-side		RS232-side	
Vdd	Vdd	TX1_TTL	TX1_TTL	TX1_RS232	TX1_RS232
GND	GND	RX1_TTL	RX1_TTL	RX1_RS232	RX1_RS232

Sheet: /ttl_rs232_max3232/
File: ttl_rs232_max3232.kicad_sch

Title:

Size: A4	Date:	Rev:
KiCad E.D.A. 9.0.0		Id: 3/5

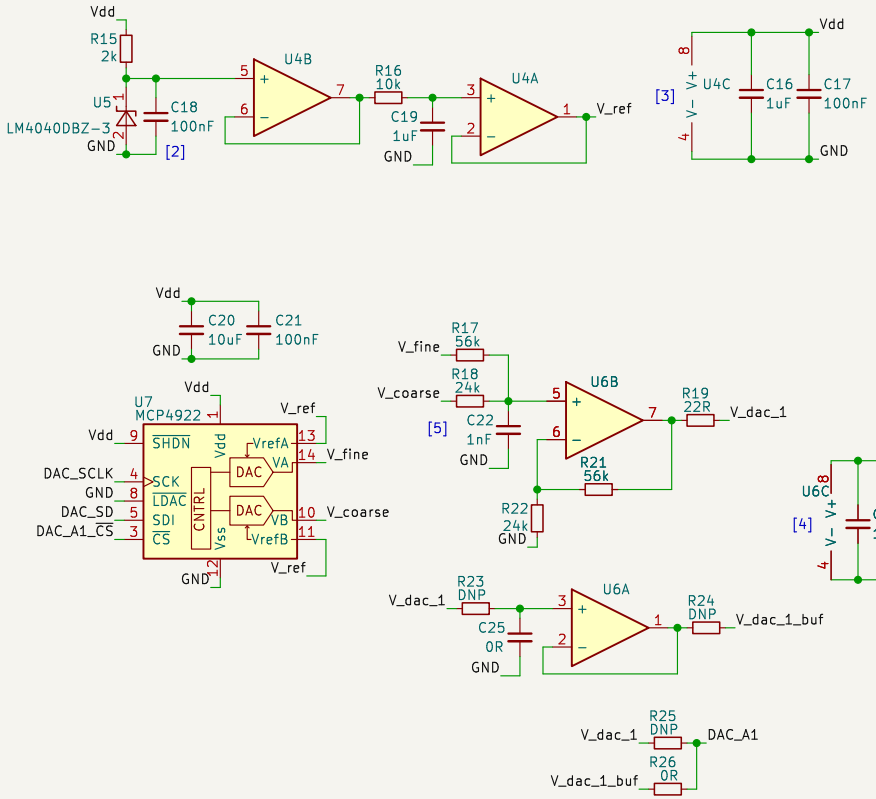

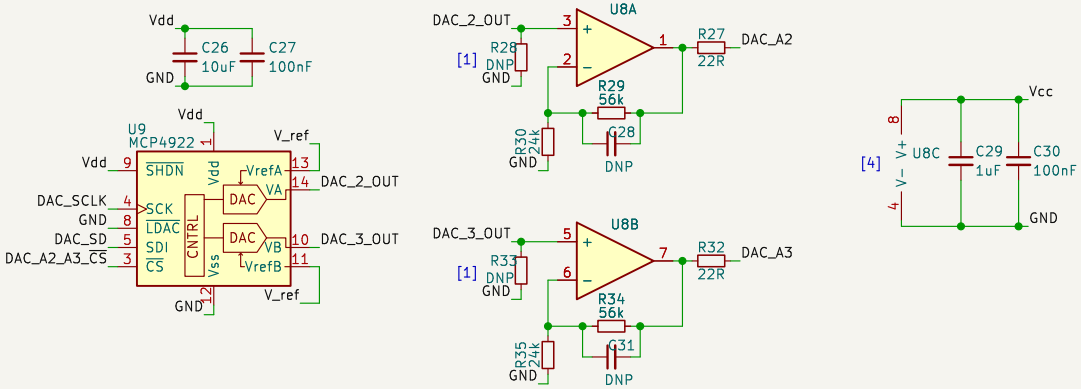

Supply
Vdd ◁ Vdd
Vcc ◁ Vcc
GND ◁ GND

Analog out
DAC_A1 ▷ DAC_A1
DAC_A2 ▷ DAC_A2
DAC_A3 ▷ DAC_A3
V_ref ▷ DAC_REF

SPI
DAC_SCLK ◁ DAC_SCLK
DAC_SD ◁ DAC_SD
DAC_A1_CS ◁ DAC_A1_CS
DAC_A2_A3_CS ◁ DAC_A2_A3_CS

Supply info
- Vdd: 3.3 V
- Vcc: 12 V

Analog outputs:
- DAC_A1, A2 and A3: 0 V – 10 V
- DAC_REF: 3 V

DAC_A1 is given by

DAC_A1 = V_fine + k*V_coarse,

where k is the amplifier's gain. V_fine gives a range between 0–3 V with the DAC's resolution, while V_corase gives a range between 0–7 V.

[1] Although MCP4922's does not seem to specify some minimum output load, we place a resistor here. This is also done in mikroe's MCP4921 board: https://download.mikroe.com/documents/add-on-boards/click/dac/dac-click-schematic-v100.pdf

[2] LM4040's datasheet recommends a 100nF bypass cap at the cathode.

[3] Since Vdd is 3.3 V and the amplifier is buffering V_ref (3 V), it is better to use a rail-to-rail input/output amplifier.

[4] Since Vcc is 12 V and the analog outputs are 10 V max, an amplifier with output swing up to Vcc – 2 V would in principle work. The input range on the other hand is 0 V – 2.5 V, coming from the DAC. Thus, the common mode range of the amplifier must include ground.

[5] This circuit is based on an application shown in the datasheet. See Example 6-5 in: https://ww1.microchip.com/downloads/en/devicedoc/22250a.pdf

Sheet: /dac_module/
File: dac_module.kicad_sch

Title:

Size: A4	Date:	Rev:
KiCad E.D.A. 9.0.0		Id: 4/5

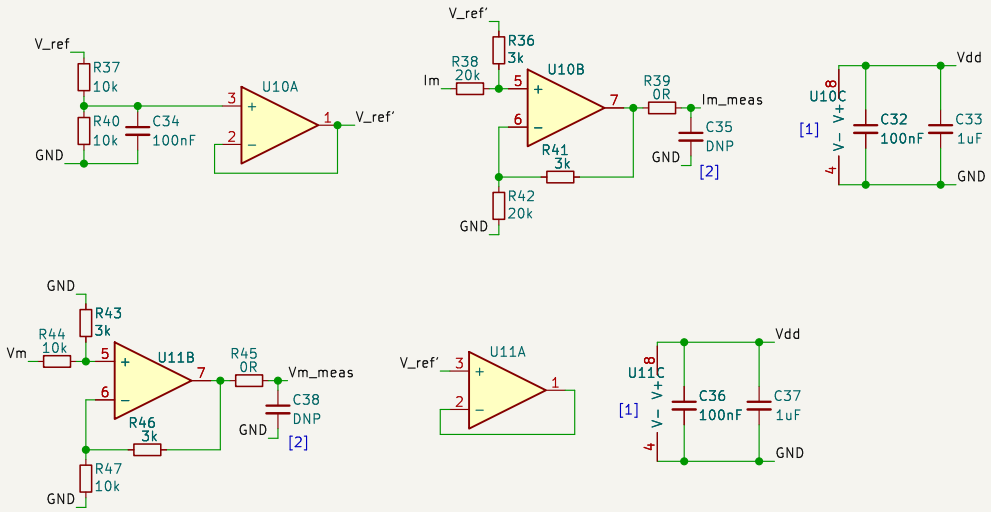

Supply
- Vcc: 3V3

Inputs
- V_ref: 3 V
- Im: −10 V to +10 V
- Vm: 0 V to 10 V

Outputs
- Im_meas: 0 V to 3 V
- Vm_meas: 0 V to 3 V

[1] The amplifier will condition the analog card's measurements to the ADC's range. Since the amplifier is (should) be supplied at the same Vcc as the ADC, and due to the range of Im and Vm, the amplifier must be rail-to-rail input/output.

[2] This small filter can be added to improve the ADC readings.

Supply
Vdd — Vdd
GND — GND

Inputs
V_ref — V_ref_adc
Im — Im
Vm — Vm

Outputs
Im_meas — Im_adc
Vm_meas — Vm_adc

Sheet: /itm39xxc_meas_cond/
File: itm39xxc_meas_cond.kicad_sch

Title:

Size: A4	Date:	**Rev:**
KiCad E.D.A. 9.0.0		Id: 5/5