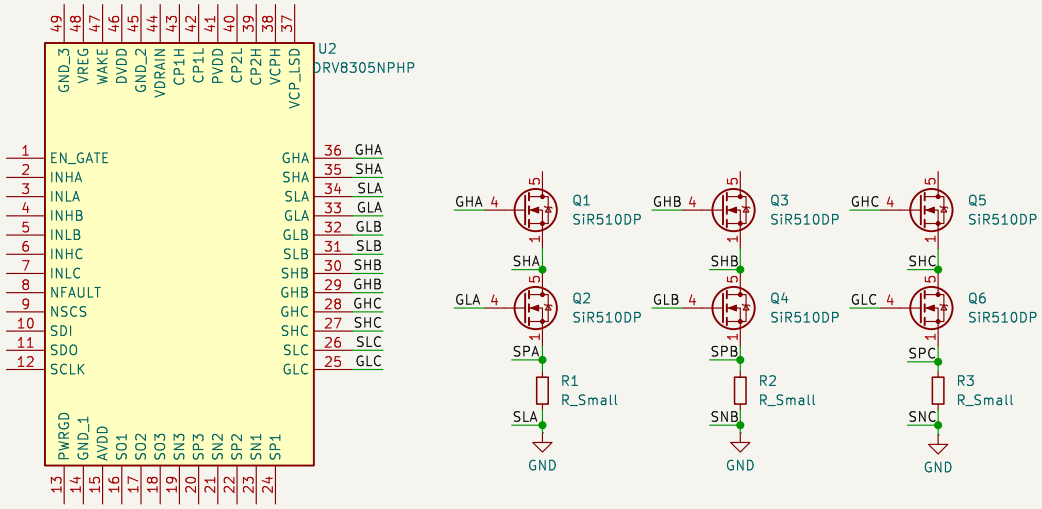

Ultra-compact automotive BLDC gate driver + power switching module

Murex Robotics [Max Liu]

Sheet: /
File: devesc.kicad_sch

Title: DEVESC

Size: A4	Date: 2024-10-06	**Rev: V1.0**
KiCad E.D.A. 9.0.0		Id: 1/1