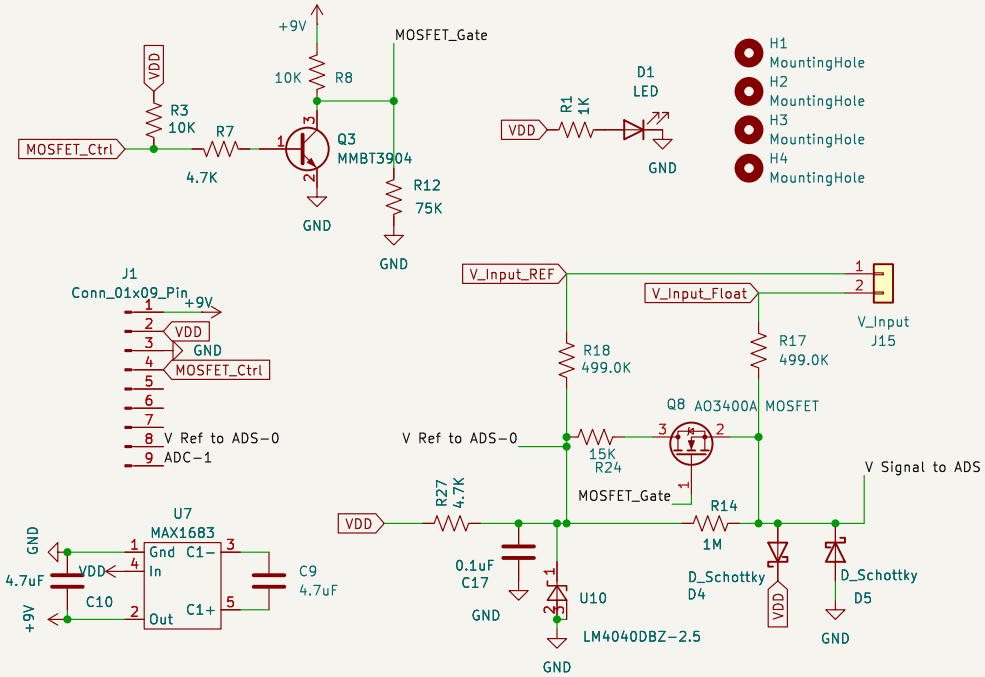

Nick Mann

Sheet: /

File: VoltmeterFrontEnd_b_asOrdered.kicad_sch

Title: Arduino Uno DMM Shield

Size: USLetter	Date: 2025-02-22	**Rev: 1A**
KiCad E.D.A. 9.0.0		Id: 1/1