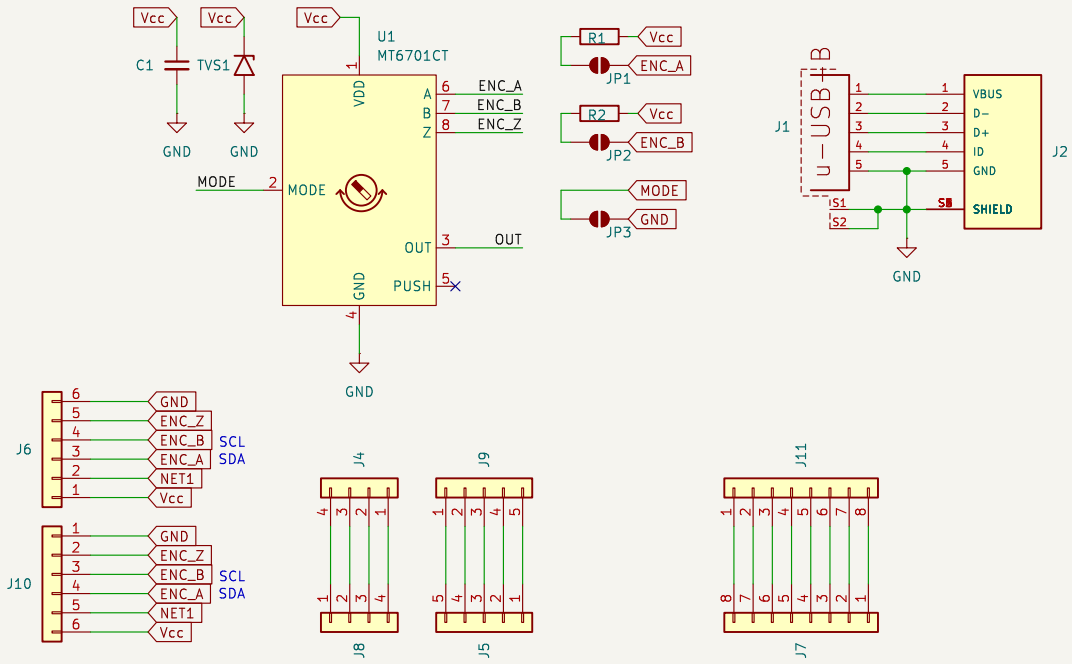

Sheet: /
File: ESC_caddyV1.0.kicad_sch

Title:

Size: A4	Date:	**Rev:**
KiCad E.D.A. 9.0.0		Id: 1/1