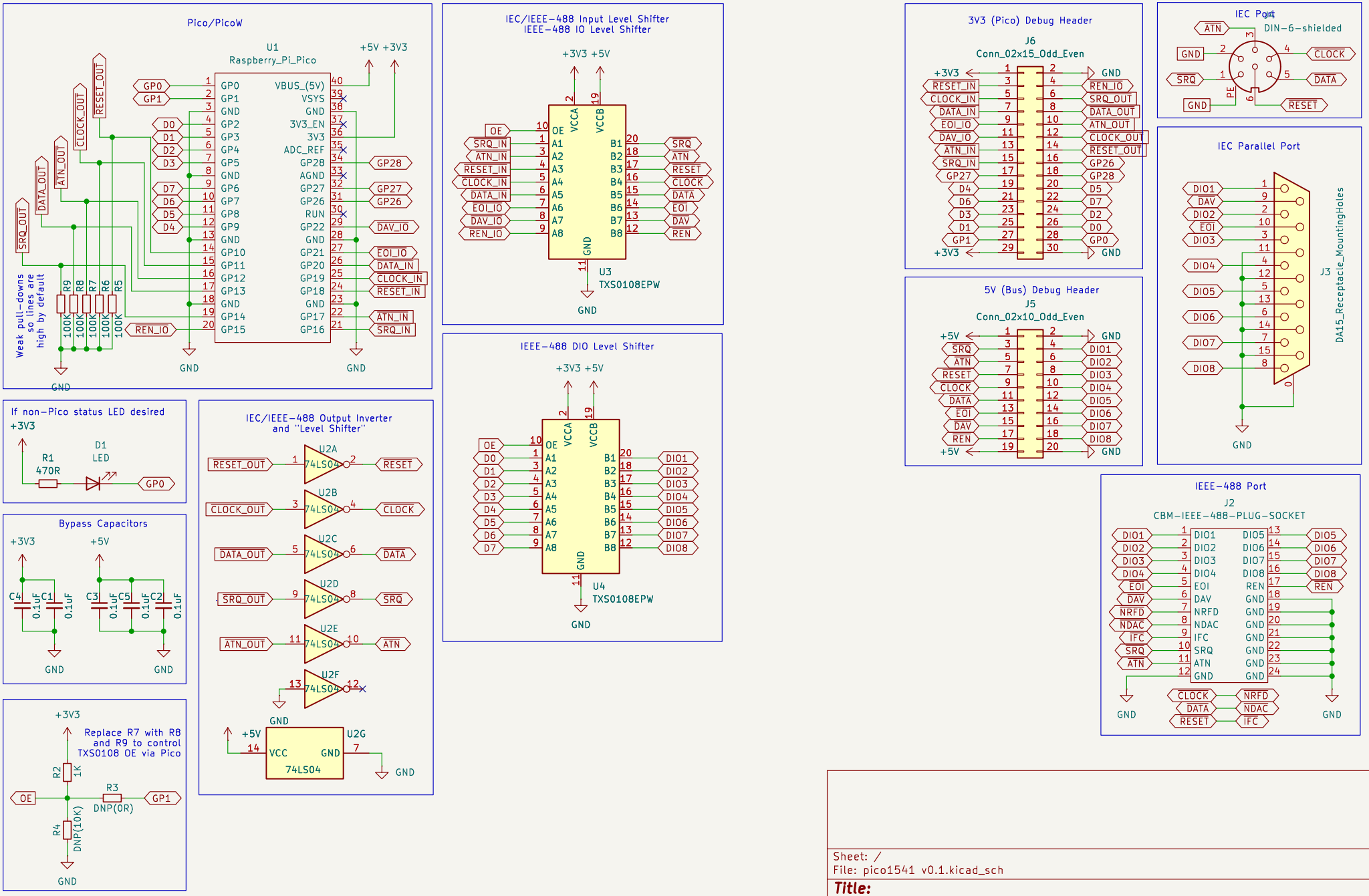

Sheet: /
File: pico1541 v0.1.kicad_sch

Title:

Size: A4	Date:	Rev:
KiCad E.D.A. 9.0.0	(c) 2025 Piers Finlayson	Id: 1/1