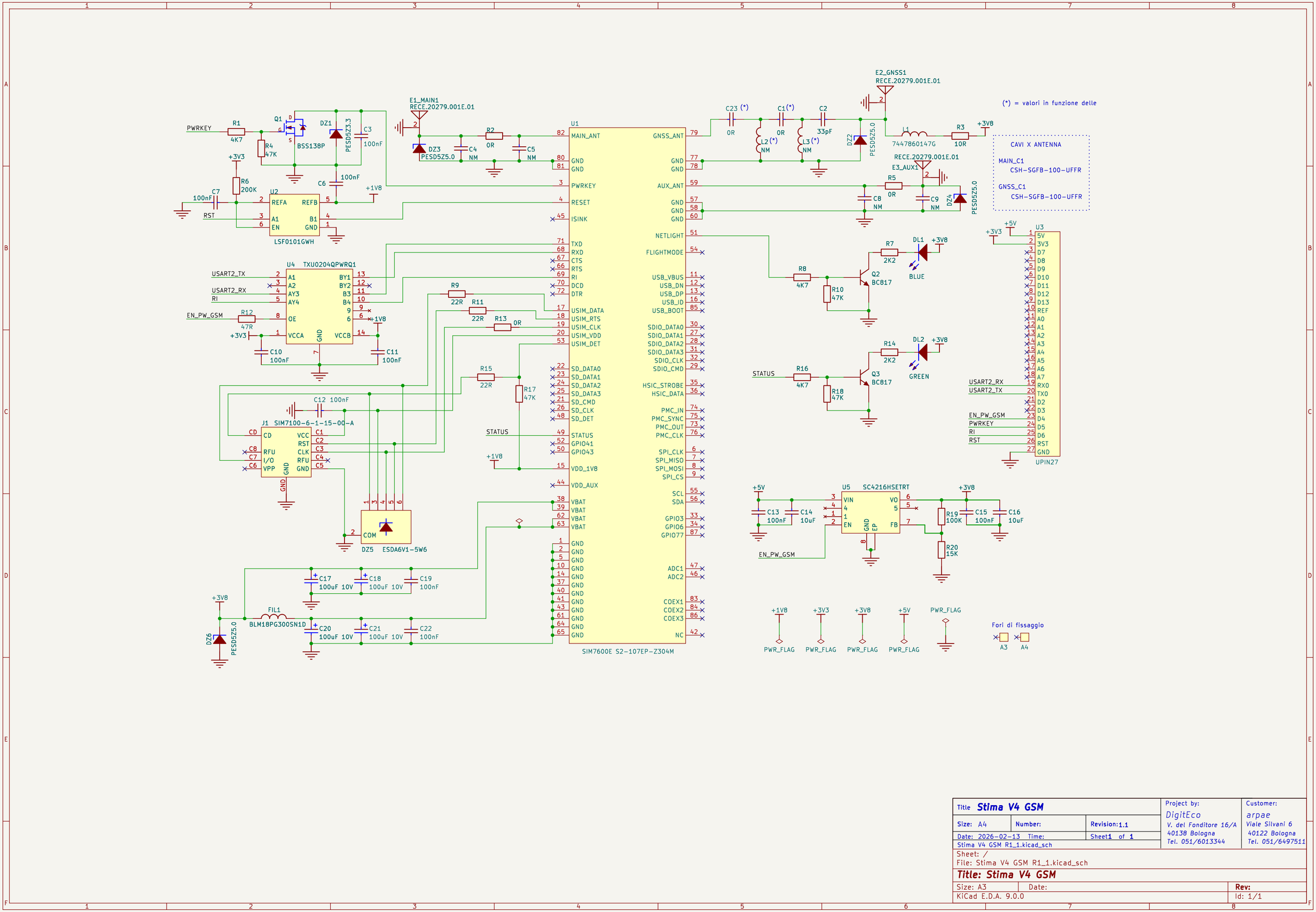

Title **Stima V4 GSM**			Project by: DigitEco, V. del Fonditore 16/A, 40138 Bologna, Tel. 051/6013344
Size: A4	Number:	Revision: 1.1	Customer: arpae, Viale Silvani 6, 40122 Bologna, Tel. 051/6497511
Date: 2026-02-13 Time:		Sheet 1 of 1	
Stima V4 GSM R1_1.kicad_sch			

Sheet: /
File: Stima V4 GSM R1_1.kicad_sch

Title: Stima V4 GSM

Size: A3	Date:	Rev:
KiCad E.D.A. 9.0.0		Id: 1/1