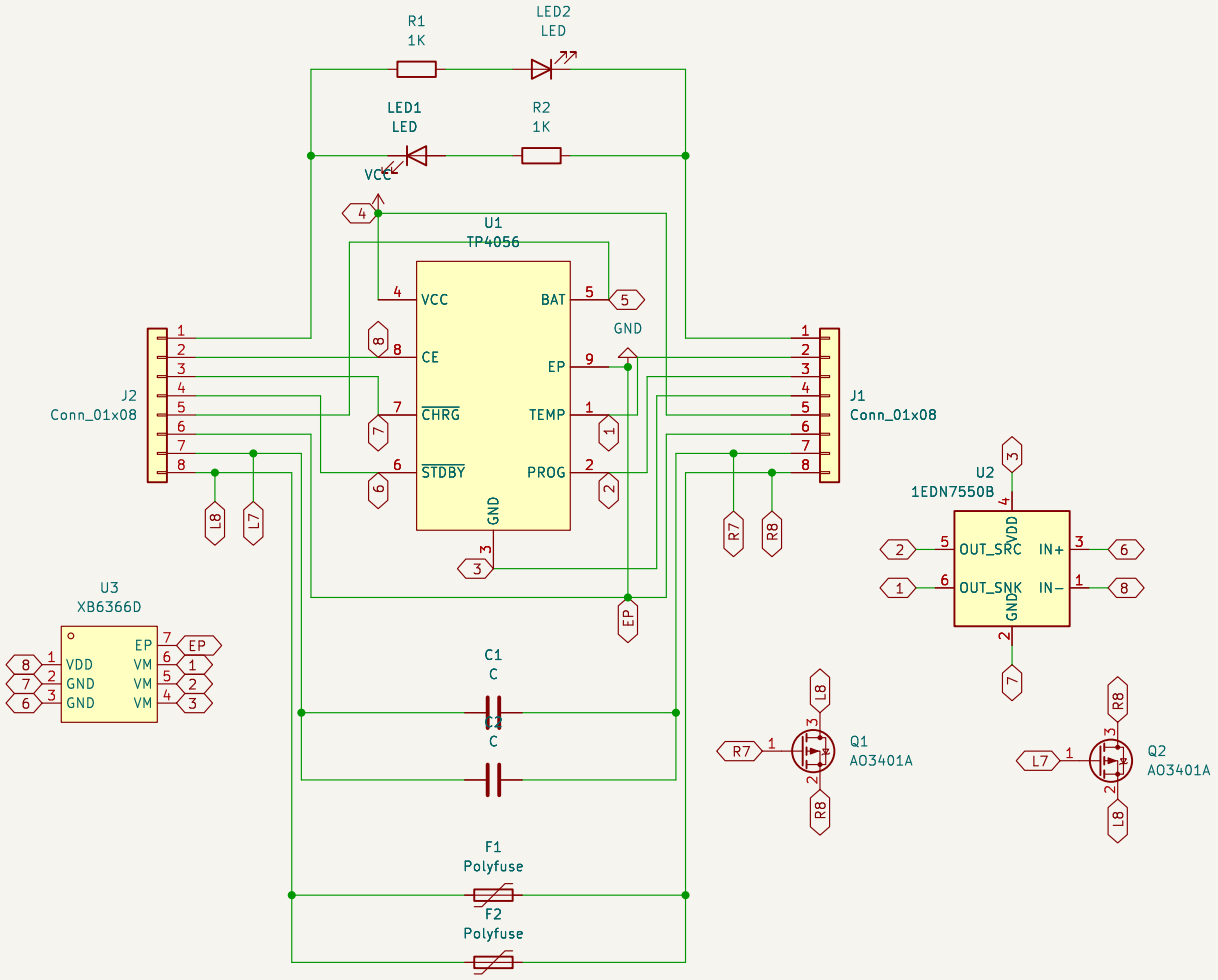

GND ⟷ PWR_FLAG
VCC ⟷ PWR_FLAG

open source hardware
CERN-OHL-P v2

Sheet: /
File: dip-adapters.kicad_sch

Title:

Size: A4	Date:	Rev:
KiCad E.D.A. 9.0.0		Id: 1/1