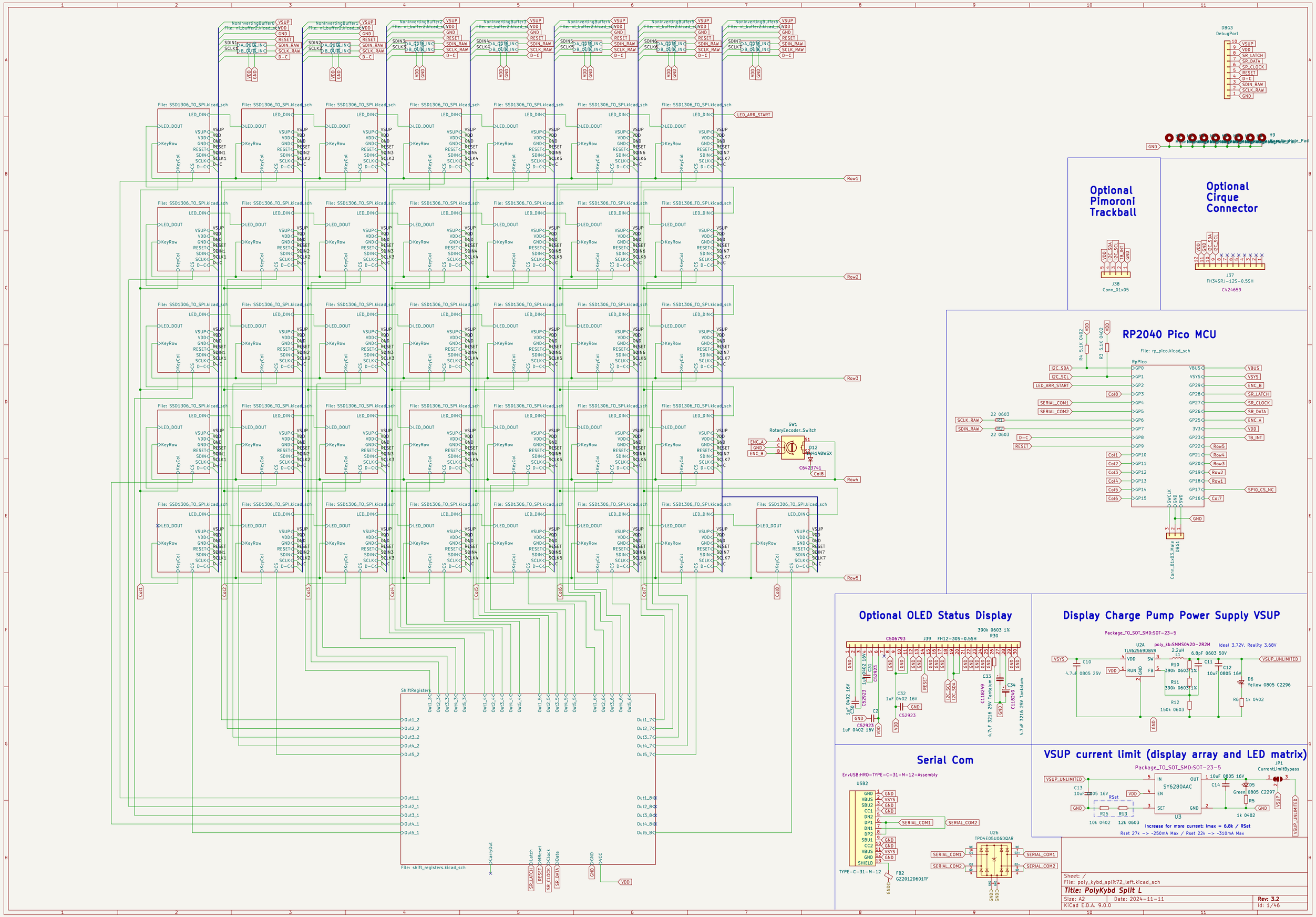
Optional Pimoroni Trackball
Optional Cirque Connector
RP2040 Pico MCU
Optional OLED Status Display
Display Charge Pump Power Supply VSUP
Serial Com
VSUP current limit (display array and LED matrix)
Sheet: /
File: poly_kybd_split72_left.kicad_sch
Title: PolyKybd Split L
Size: A2
Date: 2024-11-11
Rev: 3.2
KiCad E.D.A. 9.0.0
Id: 1/46

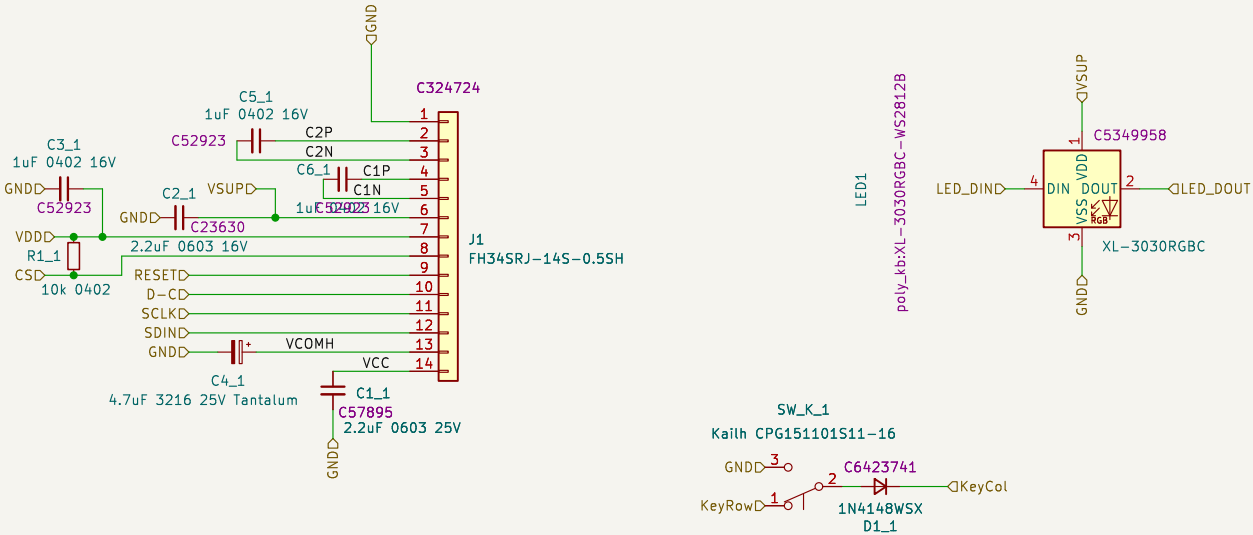

thpoll

Sheet: /K_L1/

File: SSD1306_TO_SPI.kicad_sch

Title: Display Adapter, LED & Switch

Size: A5	Date: 2024-10-11	**Rev: 3.2**
KiCad E.D.A. 9.0.0		Id: 2/46

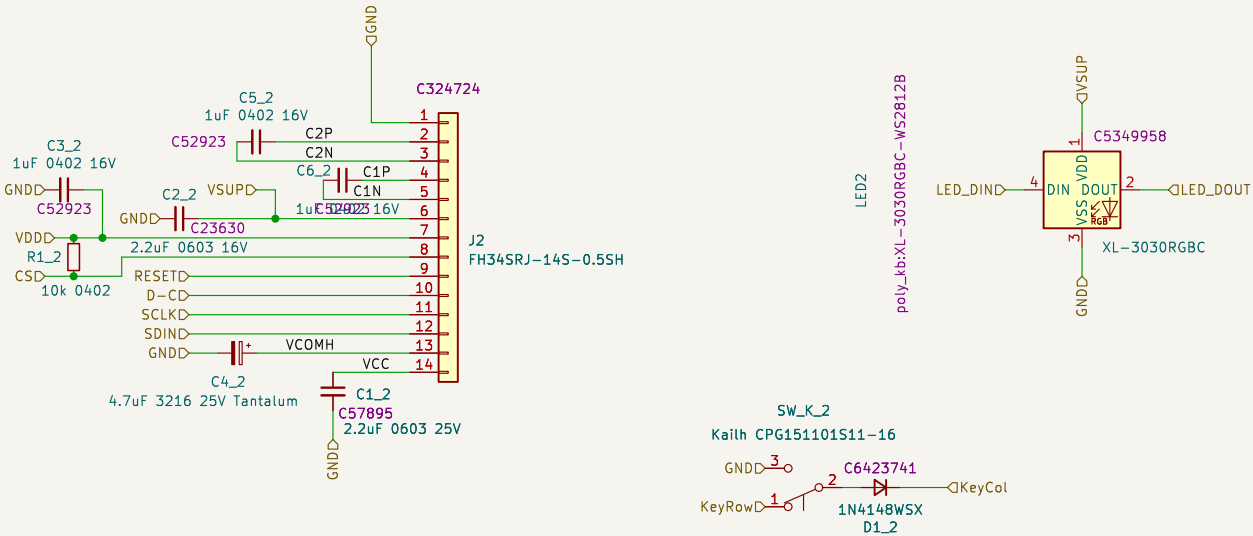

thpoll

Sheet: /K_1/

File: SSD1306_TO_SPI.kicad_sch

Title: Display Adapter, LED & Switch

Size: A5	Date: 2024-10-11	**Rev: 3.2**
KiCad E.D.A. 9.0.0		Id: 3/46

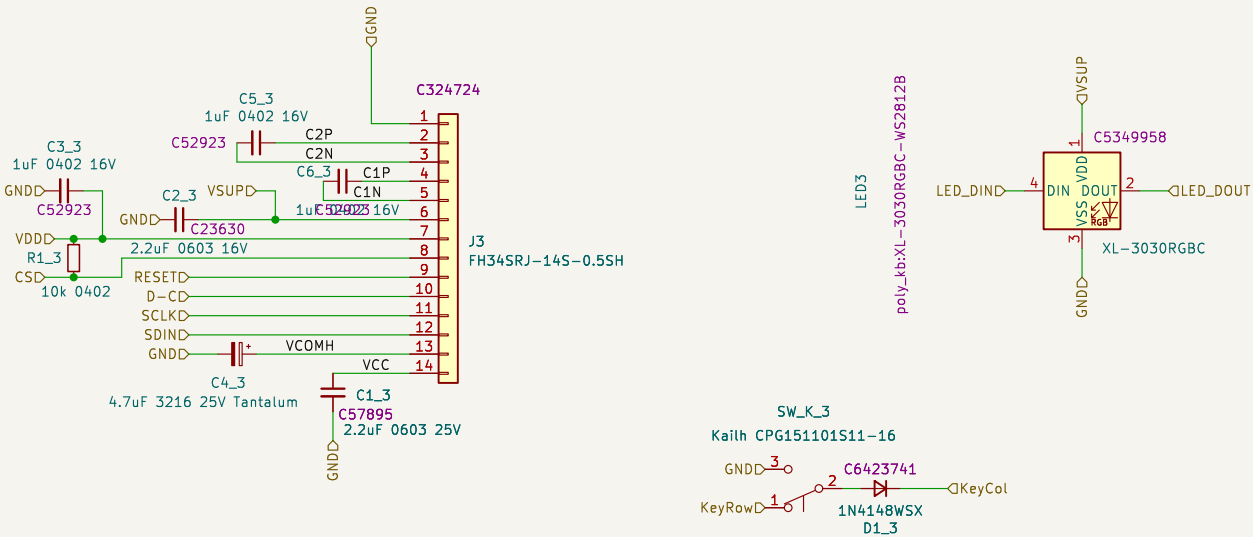

thpoll

Sheet: /K_2/

File: SSD1306_TO_SPI.kicad_sch

Title: Display Adapter, LED & Switch

Size: A5	Date: 2024-10-11	**Rev: 3.2**
KiCad E.D.A. 9.0.0		Id: 4/46

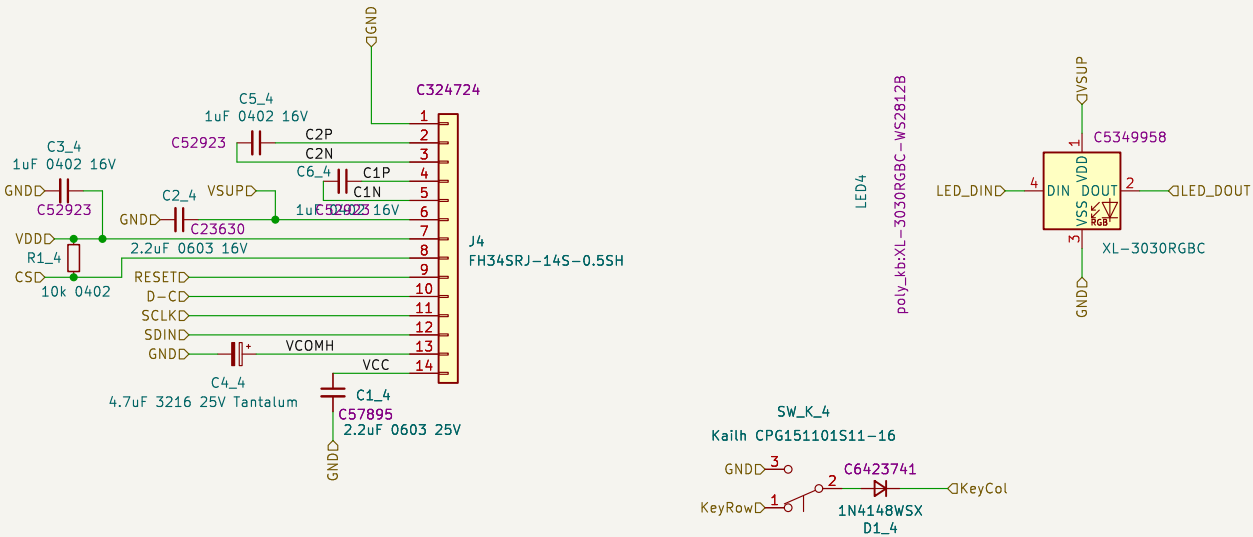

thpoll

Sheet: /K_3/

File: SSD1306_TO_SPI.kicad_sch

Title: Display Adapter, LED & Switch

Size: A5	Date: 2024-10-11	**Rev: 3.2**
KiCad E.D.A. 9.0.0		Id: 5/46

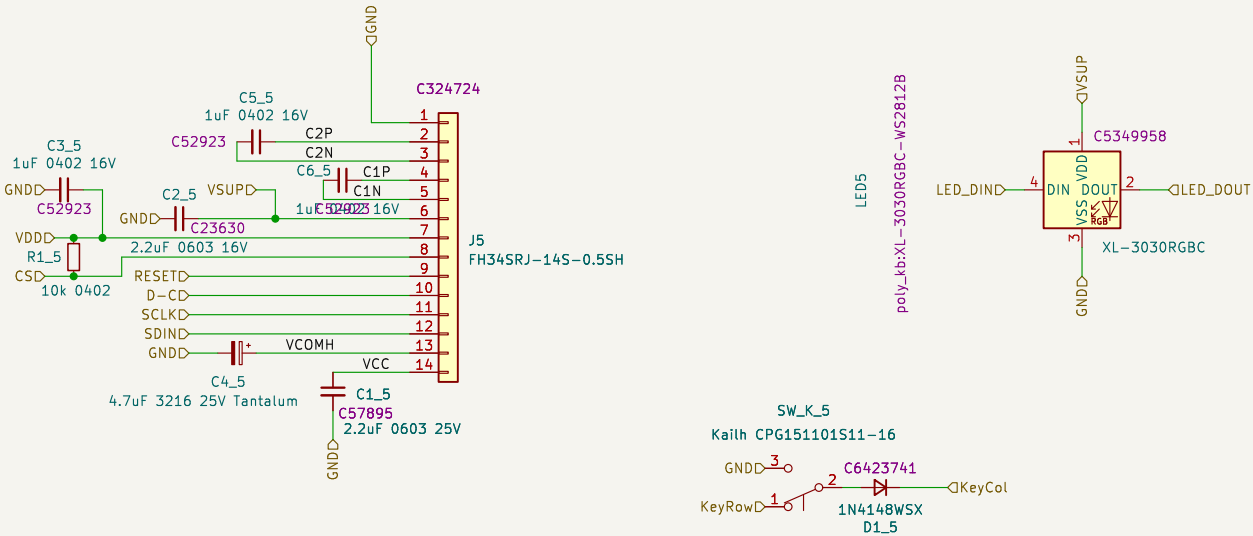

thpoll

Sheet: /K_4/

File: SSD1306_TO_SPI.kicad_sch

Title: Display Adapter, LED & Switch

Size: A5	Date: 2024-10-11	**Rev: 3.2**
KiCad E.D.A. 9.0.0		Id: 6/46

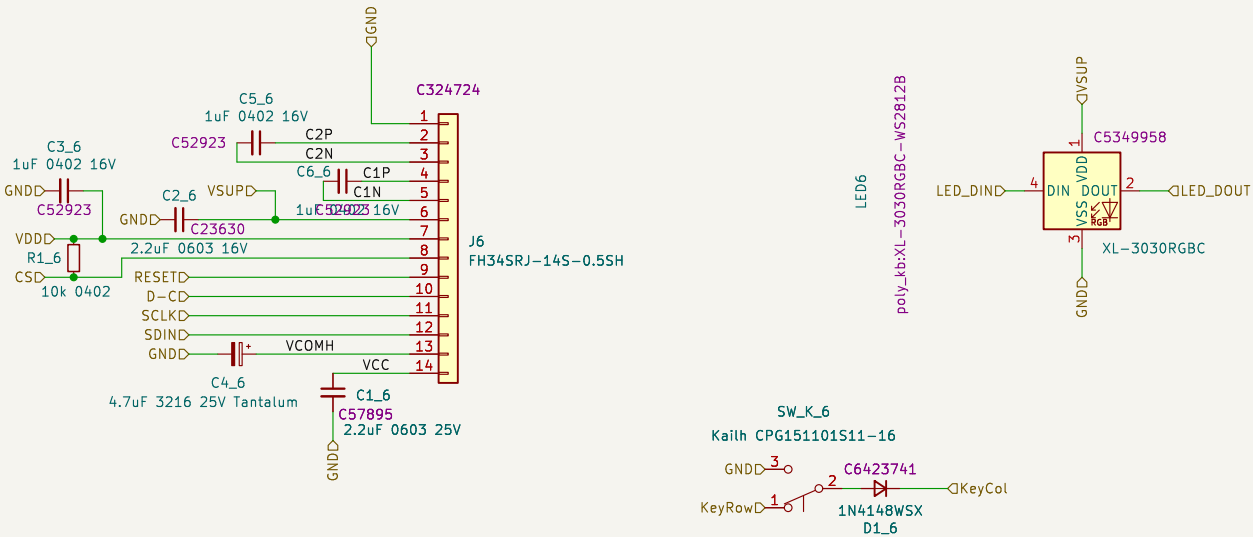

thpoll

Sheet: /K_5/

File: SSD1306_TO_SPI.kicad_sch

Title: Display Adapter, LED & Switch

Size: A5	Date: 2024-10-11	**Rev: 3.2**
KiCad E.D.A. 9.0.0		Id: 7/46

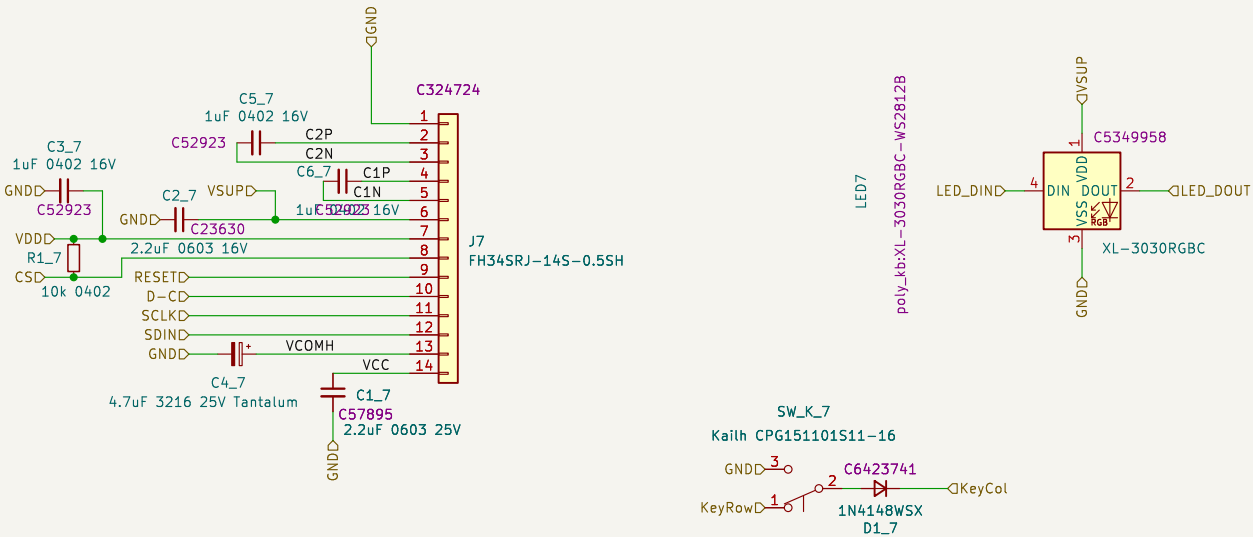

thpoll

Sheet: /K_L6/

File: SSD1306_TO_SPI.kicad_sch

Title: Display Adapter, LED & Switch

Size: A5	Date: 2024-10-11	**Rev: 3.2**
KiCad E.D.A. 9.0.0		Id: 8/46

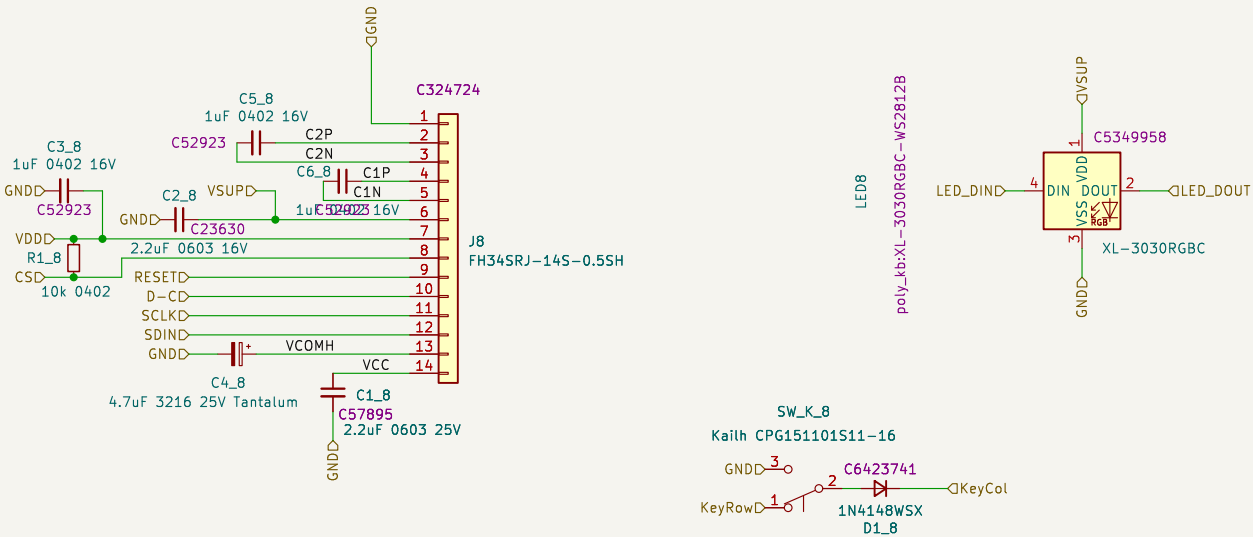

thpoll

Sheet: /K_L2/

File: SSD1306_TO_SPI.kicad_sch

Title: Display Adapter, LED & Switch

Size: A5	Date: 2024-10-11	**Rev: 3.2**
KiCad E.D.A. 9.0.0		Id: 9/46

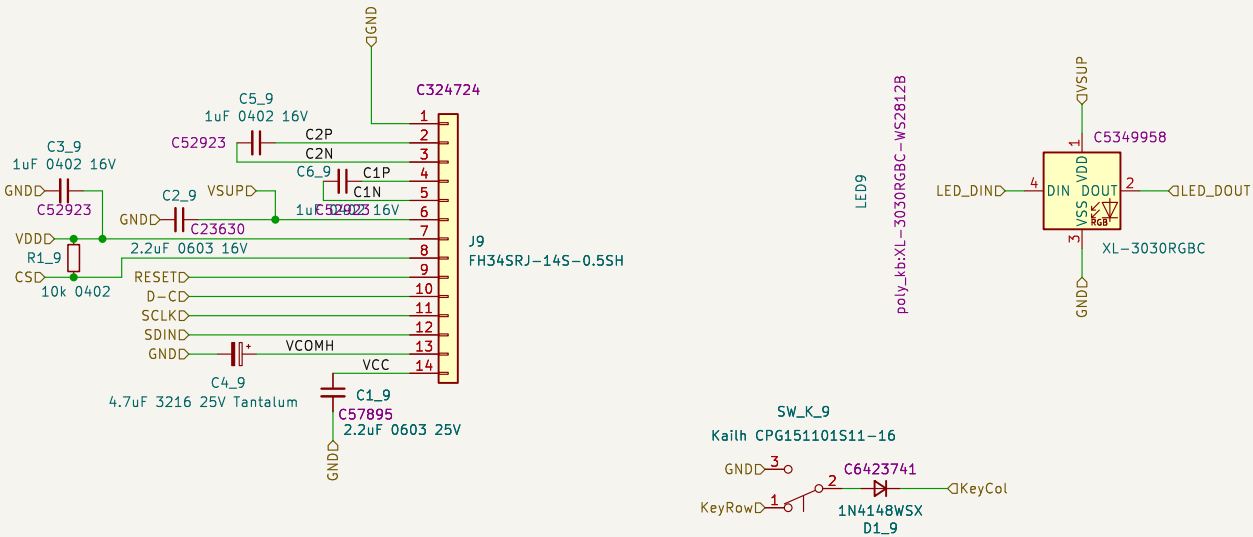

thpoll

Sheet: /K_Q/

File: SSD1306_TO_SPI.kicad_sch

Title: Display Adapter, LED & Switch

Size: A5	Date: 2024-10-11	**Rev: 3.2**
KiCad E.D.A. 9.0.0		Id: 10/46

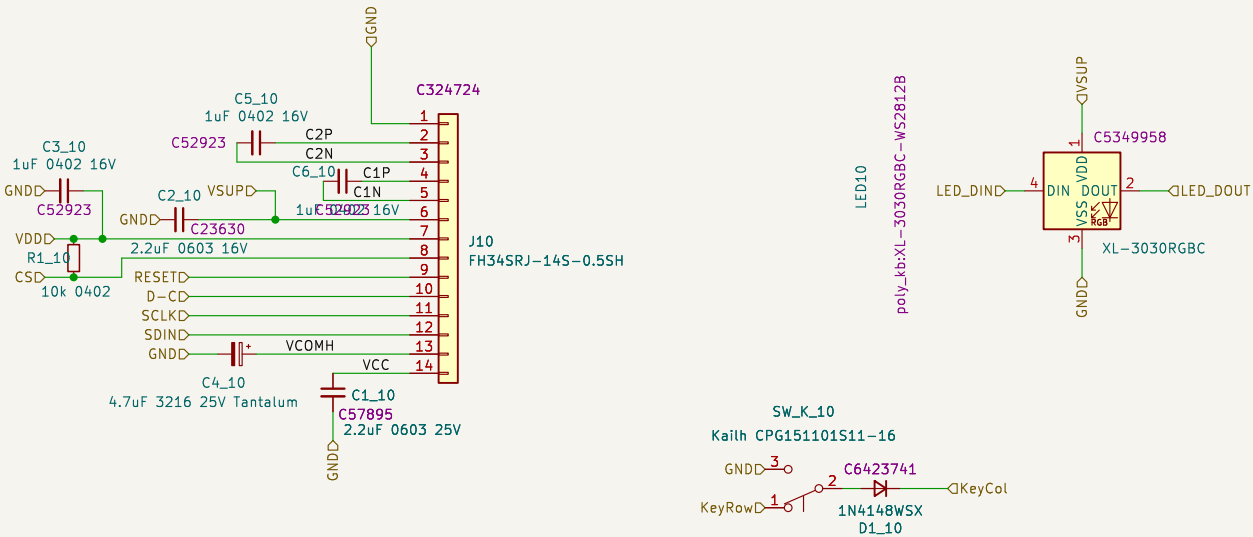

thpoll

Sheet: /K_W/

File: SSD1306_TO_SPI.kicad_sch

Title: Display Adapter, LED & Switch

Size: A5	Date: 2024-10-11	**Rev: 3.2**
KiCad E.D.A. 9.0.0		Id: 11/46

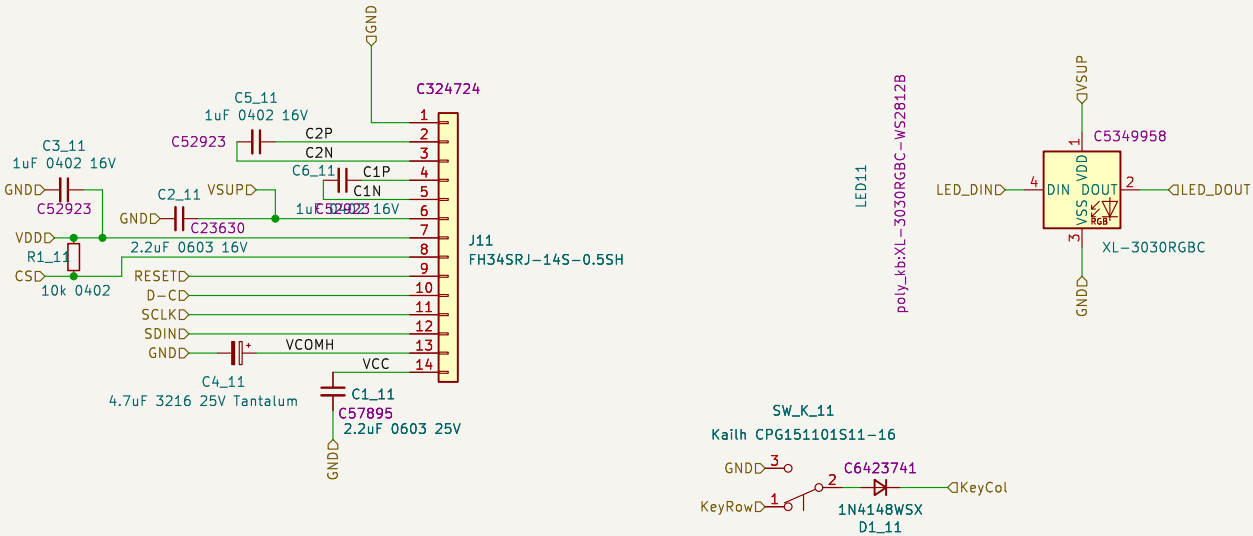

thpoll

Sheet: /K_E/

File: SSD1306_TO_SPI.kicad_sch

Title: Display Adapter, LED & Switch

Size: A5	Date: 2024-10-11	**Rev: 3.2**
KiCad E.D.A. 9.0.0		Id: 12/46

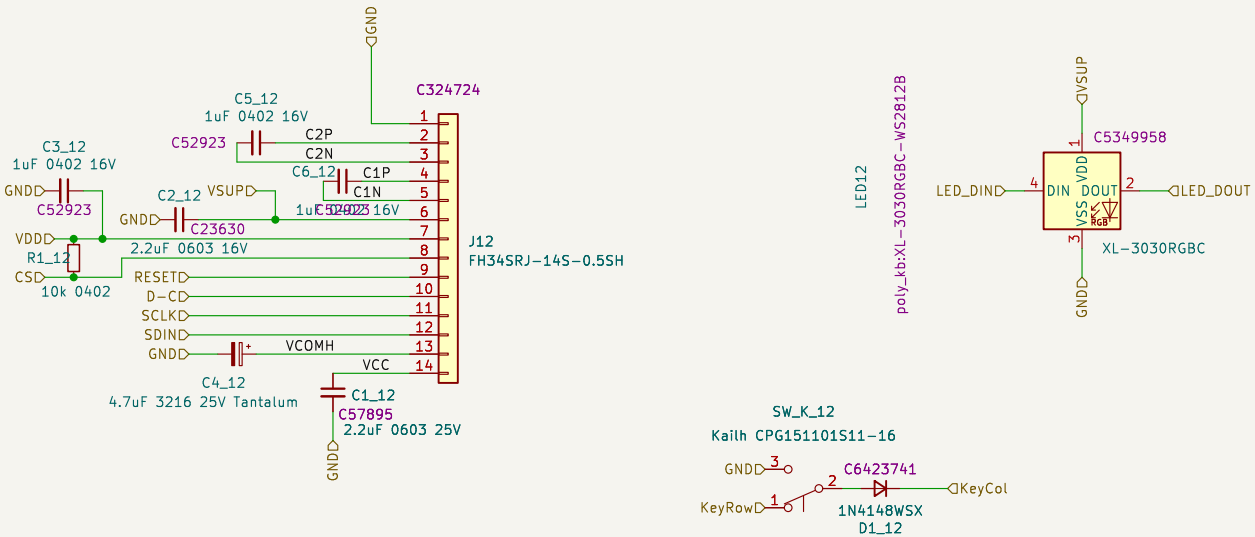

thpoll

Sheet: /K_R/

File: SSD1306_TO_SPI.kicad_sch

Title: Display Adapter, LED & Switch

Size: A5	Date: 2024-10-11	**Rev: 3.2**
KiCad E.D.A. 9.0.0		Id: 13/46

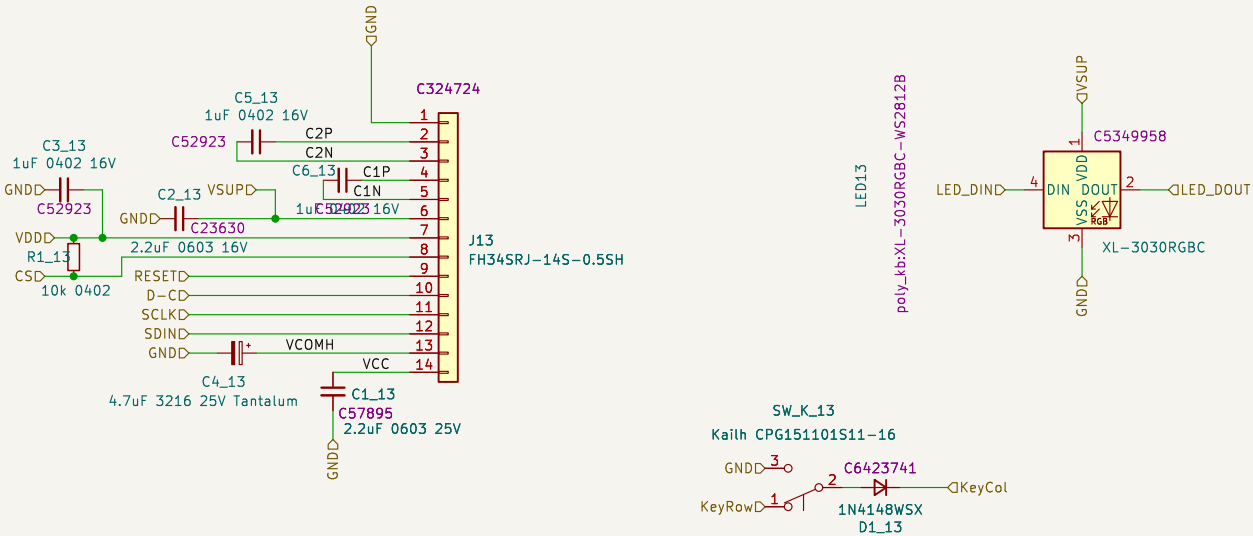

thpoll

Sheet: /K_T/

File: SSD1306_TO_SPI.kicad_sch

Title: Display Adapter, LED & Switch

Size: A5	Date: 2024-10-11	**Rev: 3.2**
KiCad E.D.A. 9.0.0		Id: 14/46

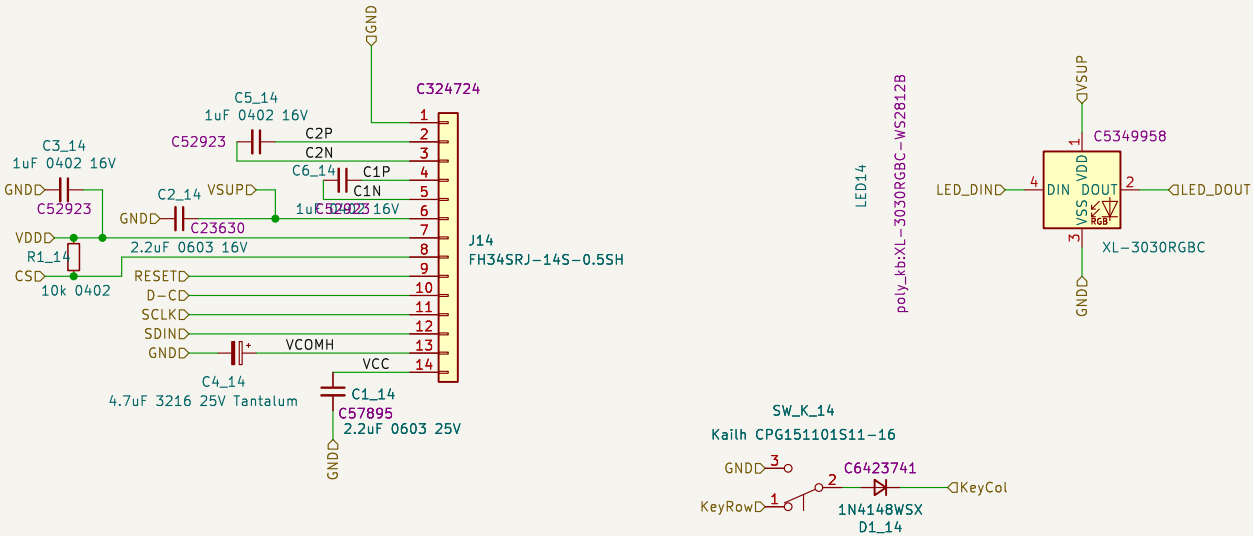

thpoll

Sheet: /K_L7/

File: SSD1306_TO_SPI.kicad_sch

Title: Display Adapter, LED & Switch

Size: A5	Date: 2024-10-11	**Rev: 3.2**
KiCad E.D.A. 9.0.0		Id: 15/46

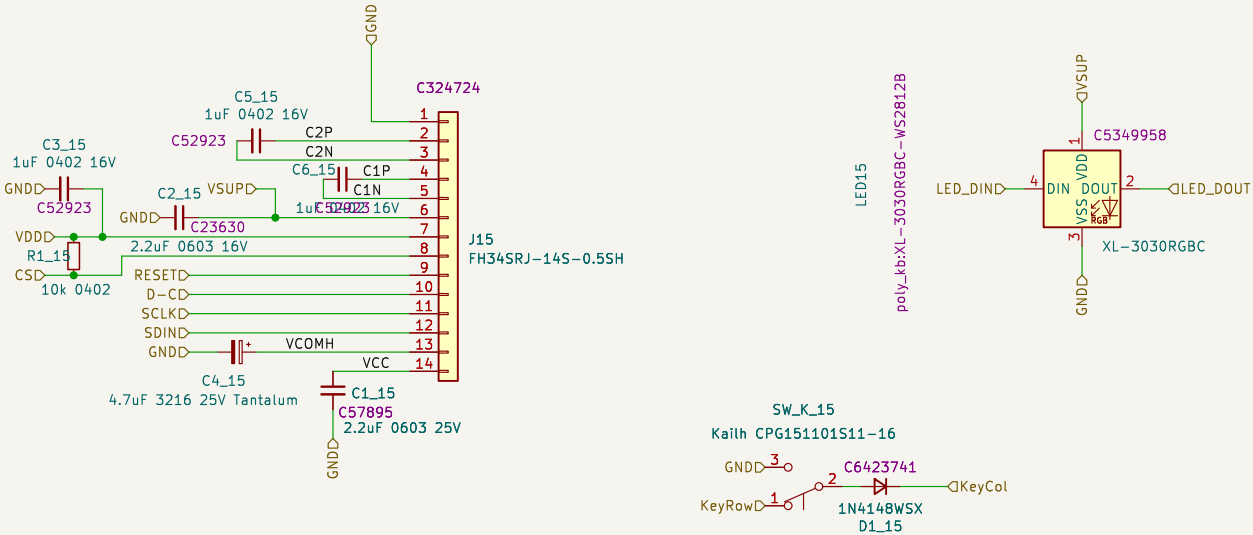

thpoll

Sheet: /K_L3/

File: SSD1306_TO_SPI.kicad_sch

Title: Display Adapter, LED & Switch

Size: A5	Date: 2024-10-11	**Rev: 3.2**
KiCad E.D.A. 9.0.0		Id: 16/46

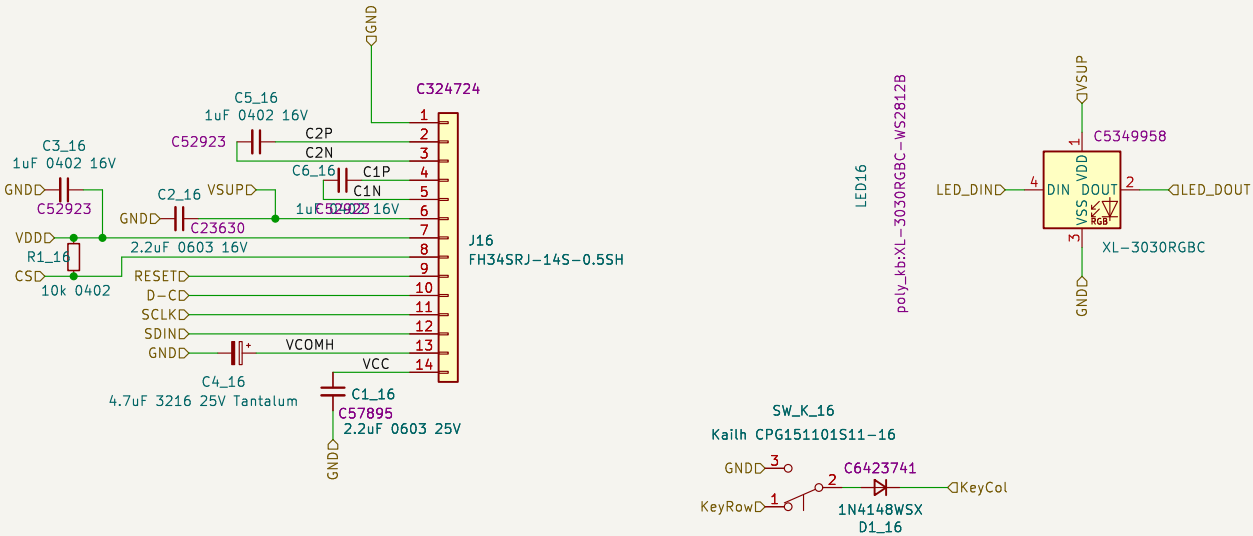

thpoll

Sheet: /K_A/

File: SSD1306_TO_SPI.kicad_sch

Title: Display Adapter, LED & Switch

Size: A5	Date: 2024-10-11	**Rev: 3.2**
KiCad E.D.A. 9.0.0		Id: 17/46

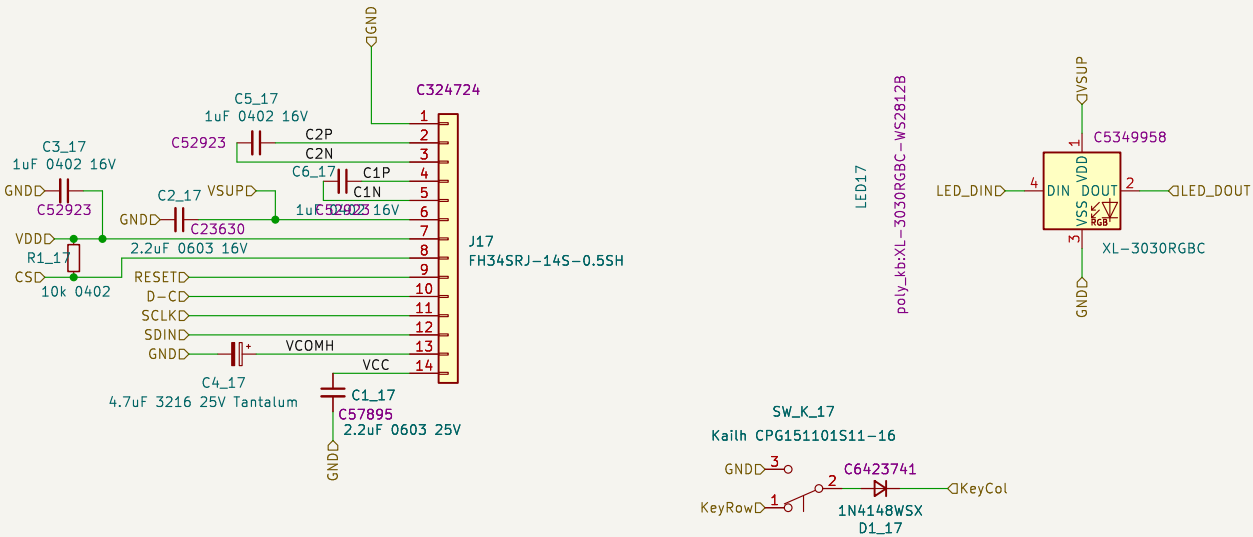

thpoll

Sheet: /K_S/

File: SSD1306_TO_SPI.kicad_sch

Title: Display Adapter, LED & Switch

Size: A5	Date: 2024-10-11	**Rev: 3.2**
KiCad E.D.A. 9.0.0		Id: 18/46

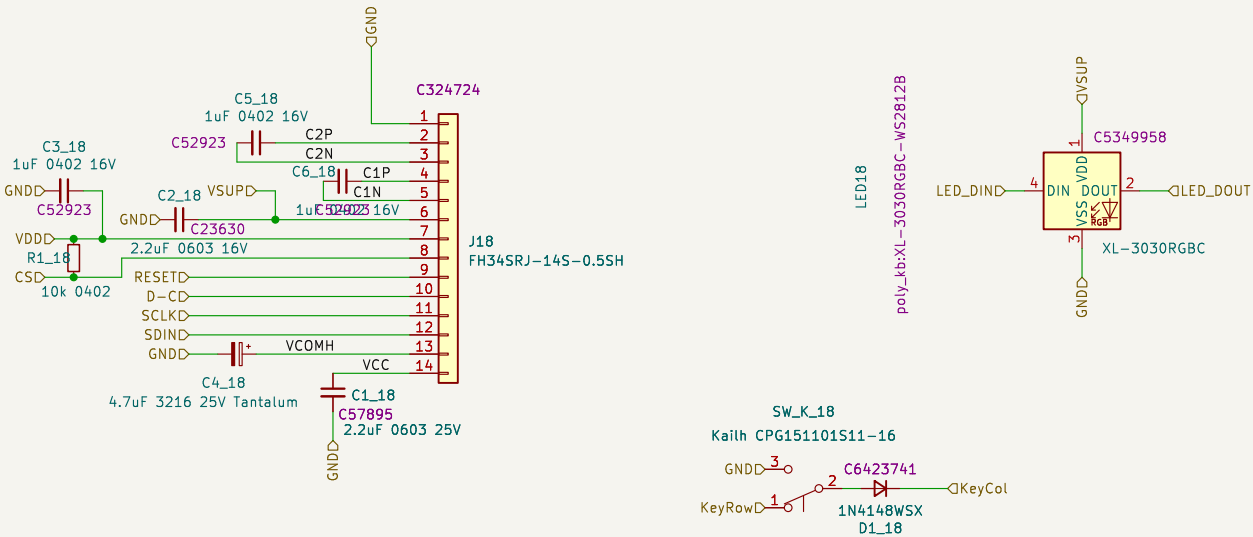

thpoll

Sheet: /K_D/

File: SSD1306_TO_SPI.kicad_sch

Title: Display Adapter, LED & Switch

Size: A5	Date: 2024-10-11	**Rev: 3.2**
KiCad E.D.A. 9.0.0		Id: 19/46

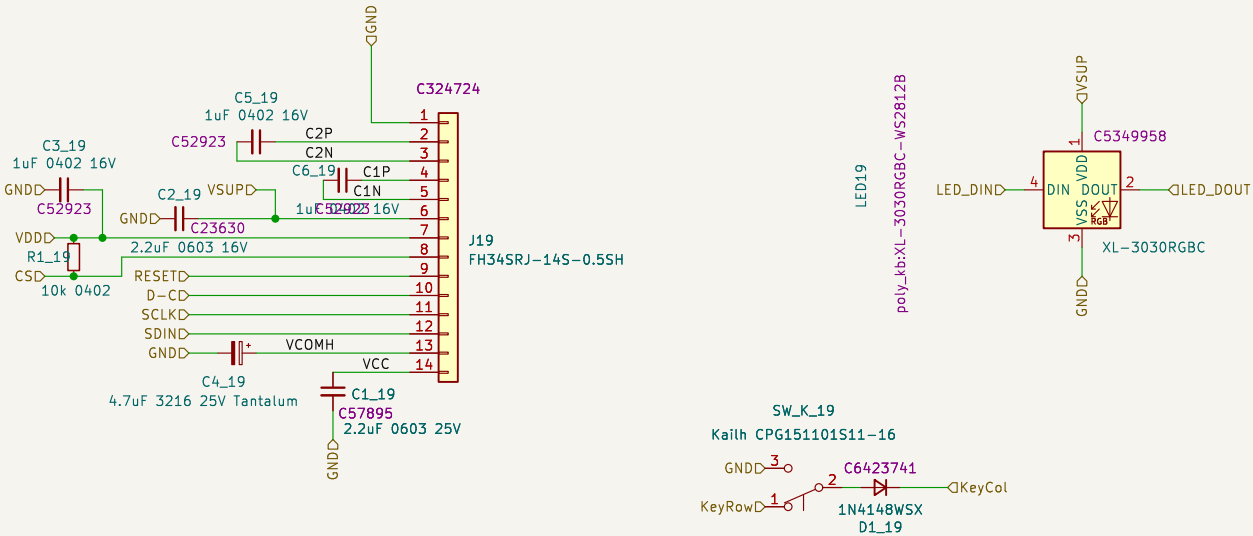

thpoll

Sheet: /K_F/

File: SSD1306_TO_SPI.kicad_sch

Title: Display Adapter, LED & Switch

Size: A5	Date: 2024-10-11	**Rev: 3.2**
KiCad E.D.A. 9.0.0		Id: 20/46

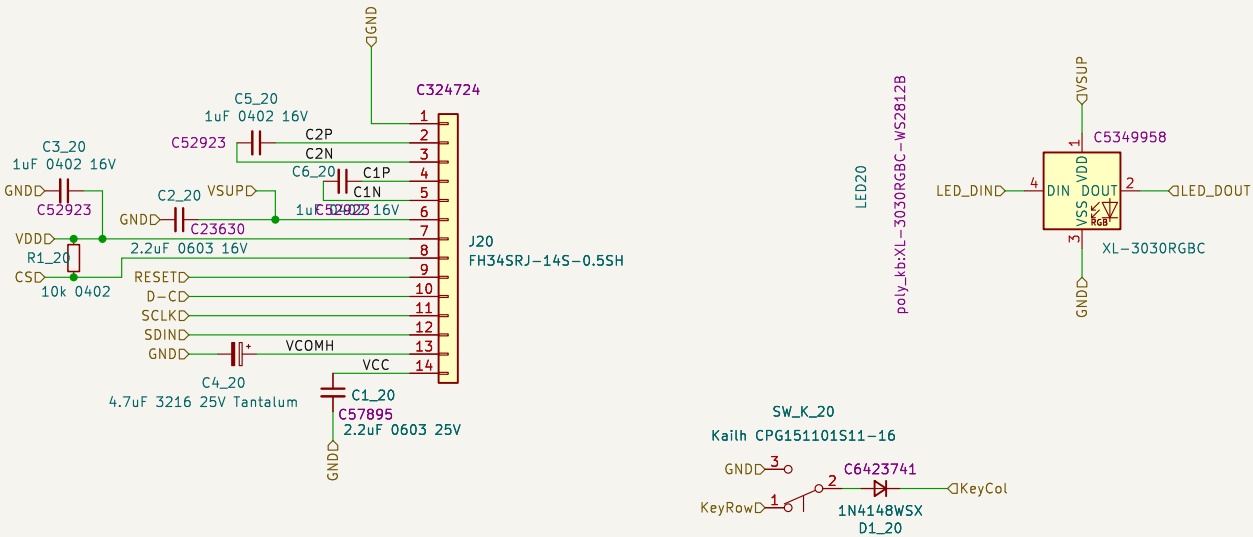

thpoll

Sheet: /K_G/

File: SSD1306_TO_SPI.kicad_sch

Title: Display Adapter, LED & Switch

Size: A5	Date: 2024-10-11	**Rev: 3.2**
KiCad E.D.A. 9.0.0		Id: 21/46

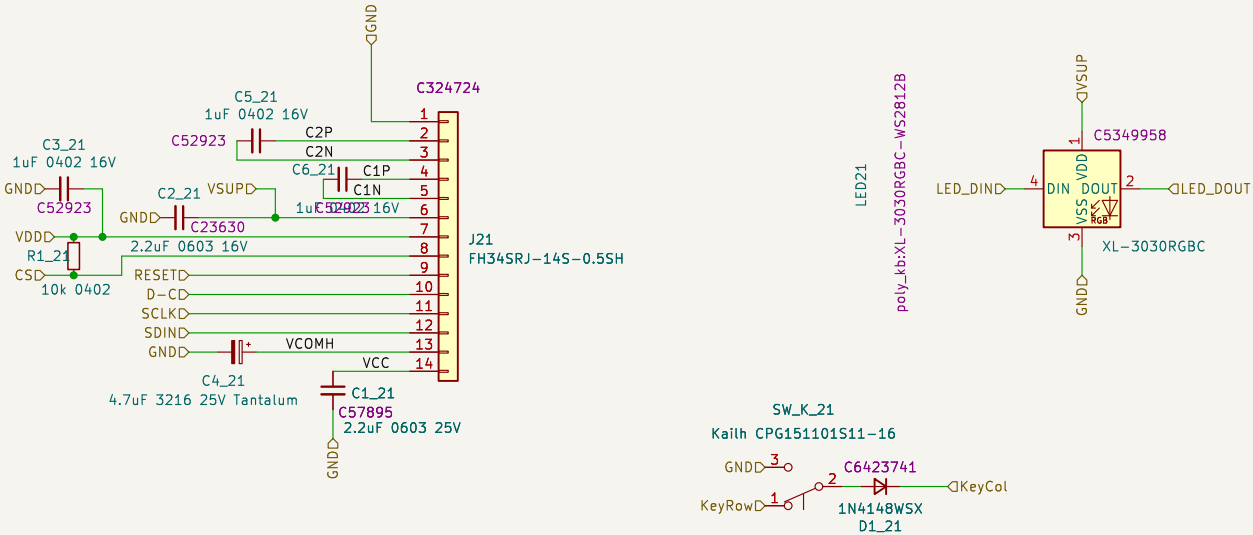

thpoll

Sheet: /K_L8/

File: SSD1306_TO_SPI.kicad_sch

Title: Display Adapter, LED & Switch

Size: A5	Date: 2024-10-11	**Rev: 3.2**
KiCad E.D.A. 9.0.0		Id: 22/46

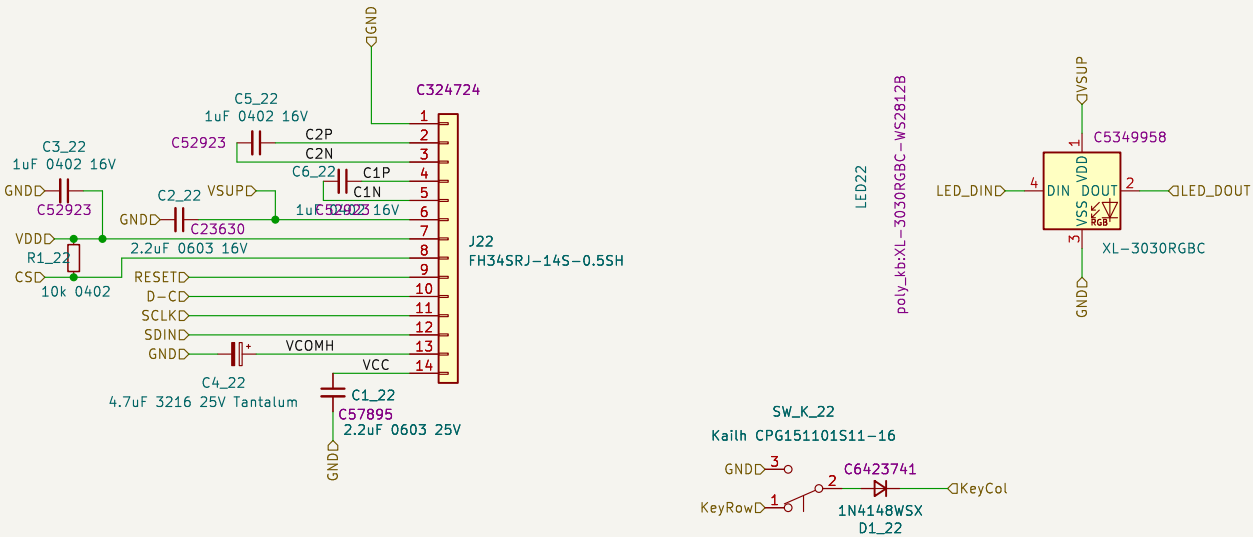

thpoll

Sheet: /K_L4/

File: SSD1306_TO_SPI.kicad_sch

Title: Display Adapter, LED & Switch

Size: A5	Date: 2024-10-11	**Rev: 3.2**
KiCad E.D.A. 9.0.0		Id: 23/46

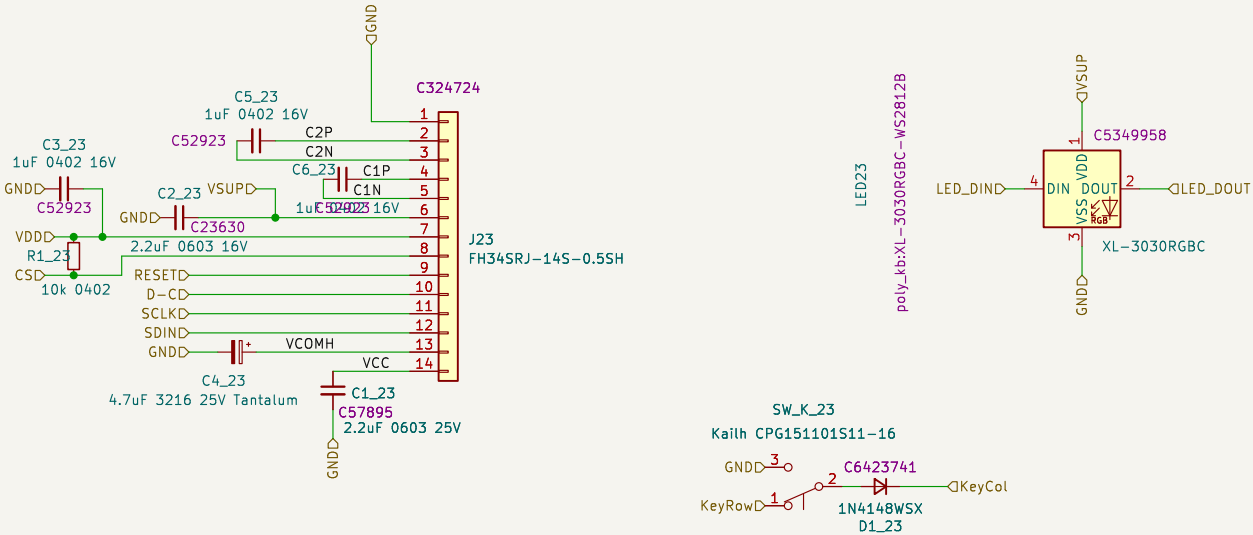

thpoll

Sheet: /K_Z/

File: SSD1306_TO_SPI.kicad_sch

Title: Display Adapter, LED & Switch

Size: A5	Date: 2024-10-11	**Rev: 3.2**
KiCad E.D.A. 9.0.0		Id: 24/46

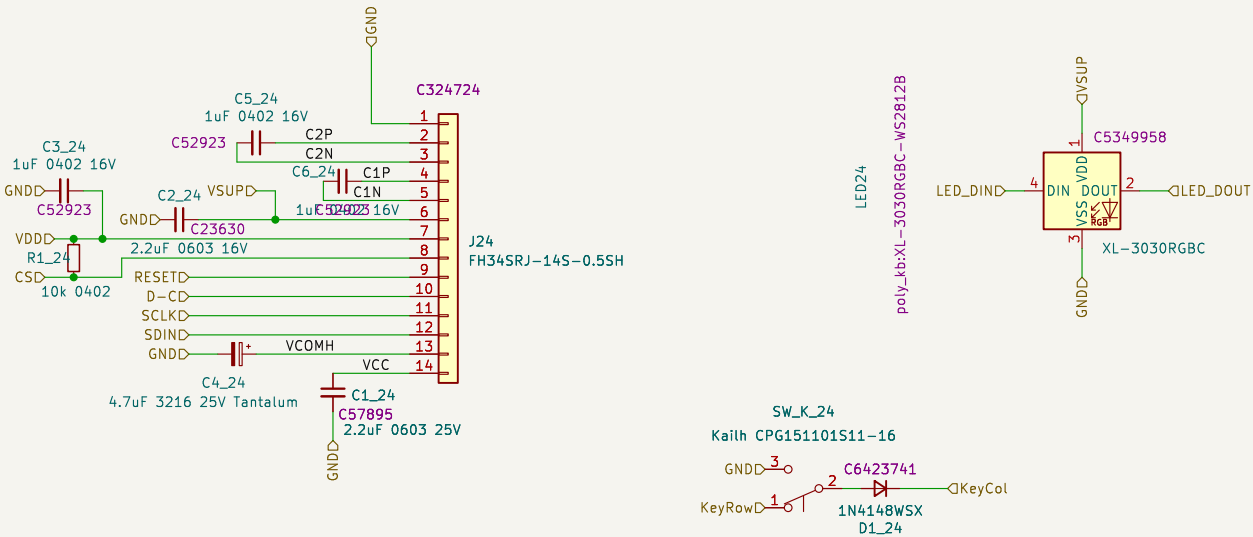

thpoll

Sheet: /K_X/

File: SSD1306_TO_SPI.kicad_sch

Title: Display Adapter, LED & Switch

Size: A5	Date: 2024-10-11	**Rev: 3.2**
KiCad E.D.A. 9.0.0		Id: 25/46

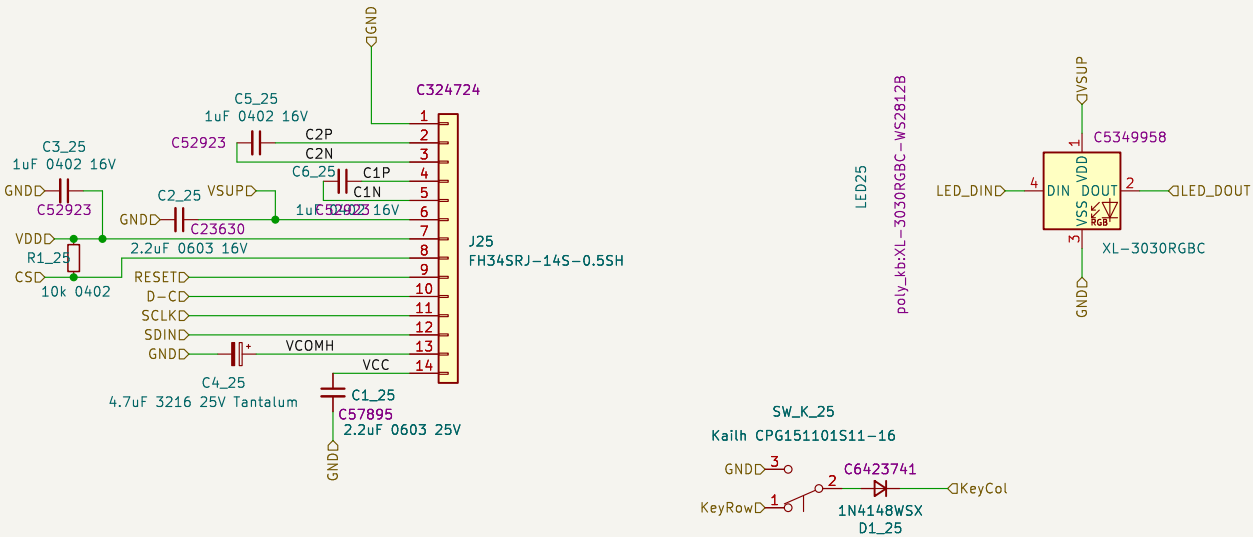

thpoll

Sheet: /K_C/

File: SSD1306_TO_SPI.kicad_sch

Title: Display Adapter, LED & Switch

Size: A5	Date: 2024-10-11	**Rev: 3.2**
KiCad E.D.A. 9.0.0		Id: 26/46

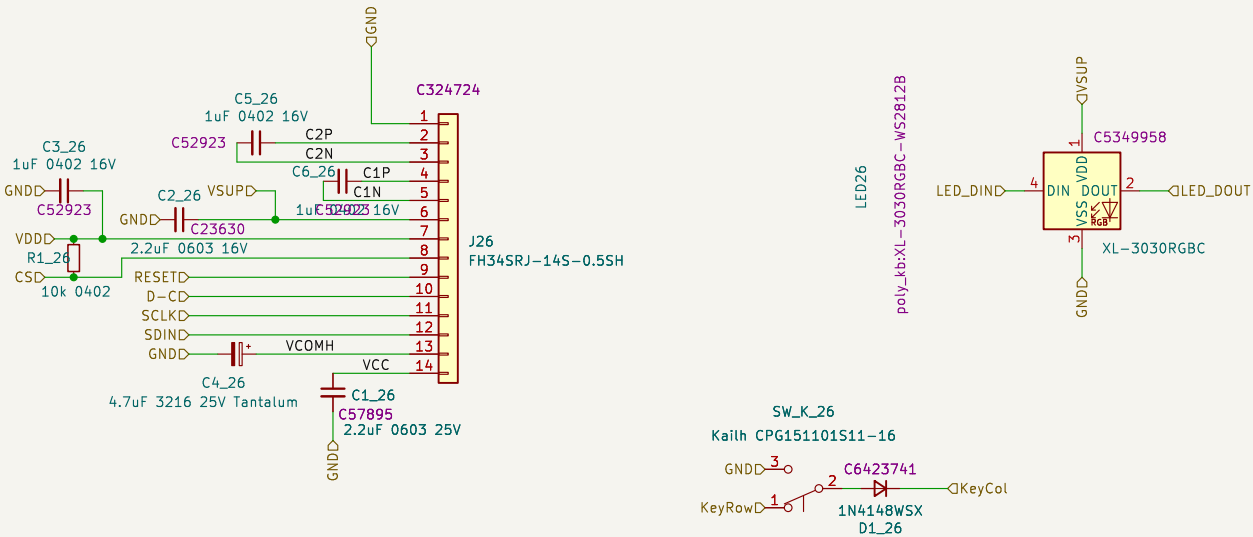

thpoll

Sheet: /K_V/

File: SSD1306_TO_SPI.kicad_sch

Title: Display Adapter, LED & Switch

Size: A5	Date: 2024-10-11	**Rev: 3.2**
KiCad E.D.A. 9.0.0		Id: 27/46

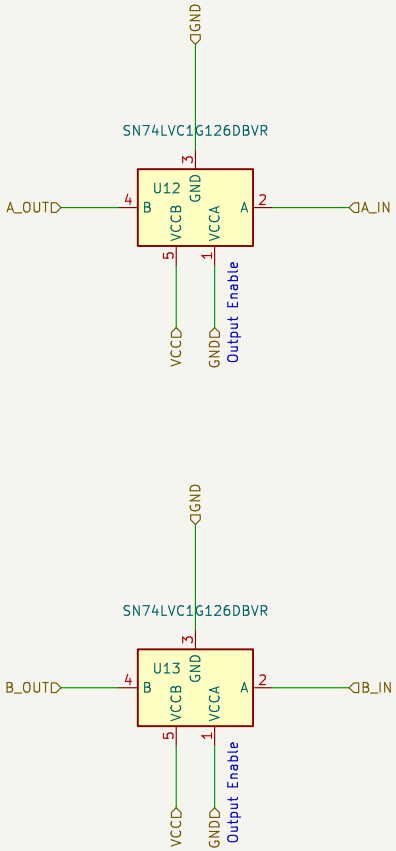

Sheet: /NonInvertingBuffer1/
File: ni_buffer2.kicad_sch

Title:

Size: A4	Date:	**Rev:**
KiCad E.D.A. 9.0.0		Id: 28/46

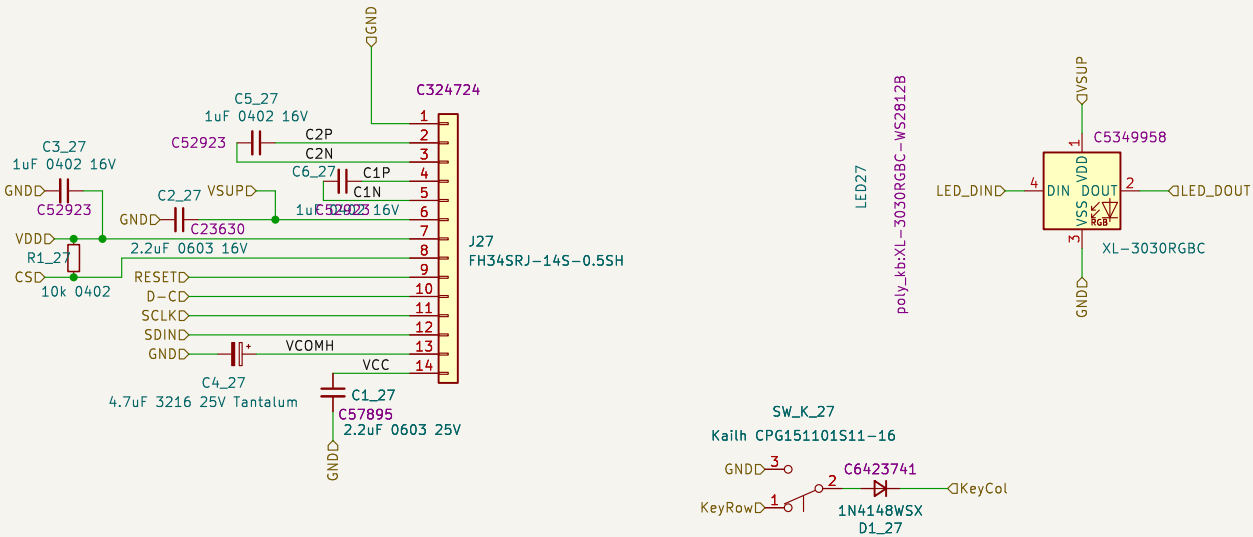

thpoll

Sheet: /K_B/

File: SSD1306_TO_SPI.kicad_sch

Title: Display Adapter, LED & Switch

Size: A5	Date: 2024-10-11	**Rev: 3.2**
KiCad E.D.A. 9.0.0		Id: 29/46

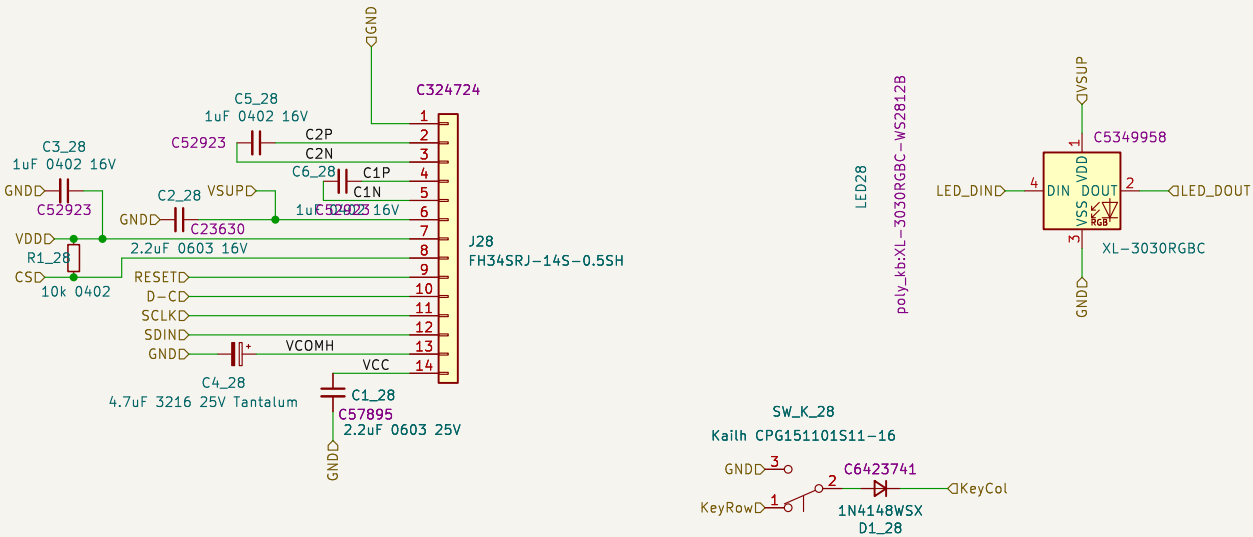

thpoll

Sheet: /K_L9/

File: SSD1306_TO_SPI.kicad_sch

Title: Display Adapter, LED & Switch

Size: A5	Date: 2024-10-11	**Rev: 3.2**
KiCad E.D.A. 9.0.0		Id: 30/46

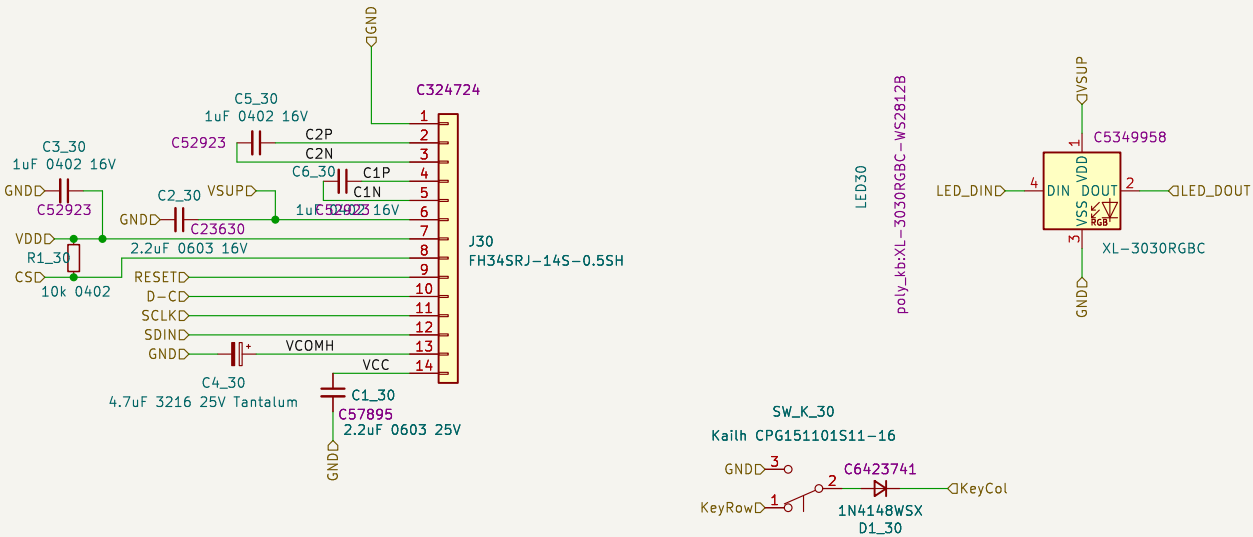

thpoll

Sheet: /K_B1/

File: SSD1306_TO_SPI.kicad_sch

Title: Display Adapter, LED & Switch

Size: A5	Date: 2024-10-11	**Rev: 3.2**
KiCad E.D.A. 9.0.0		Id: 31/46

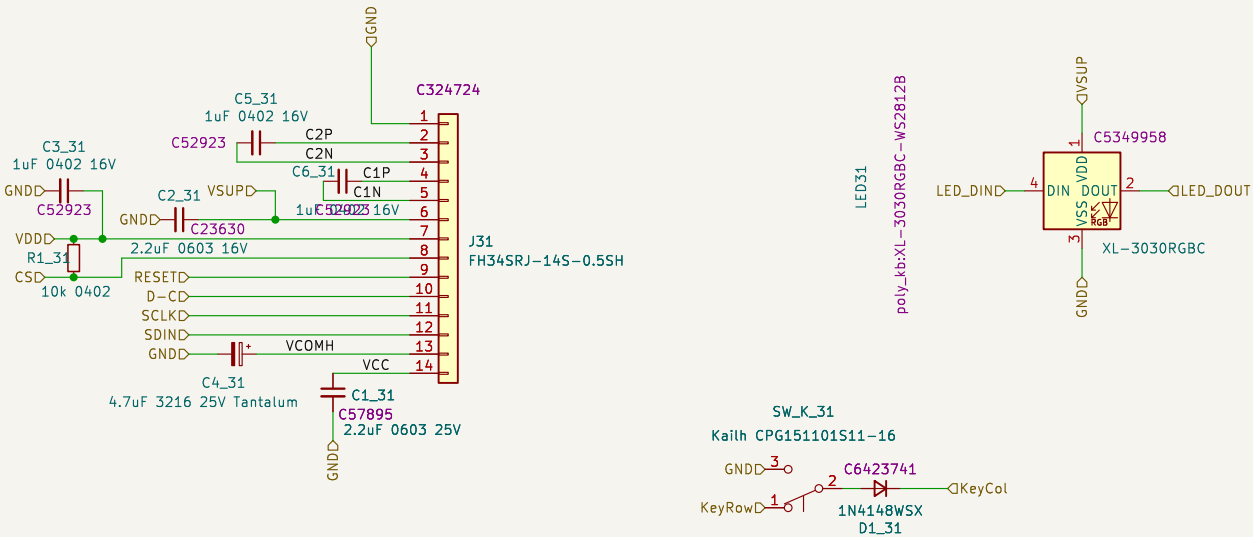

thpoll

Sheet: /K_B2/

File: SSD1306_TO_SPI.kicad_sch

Title: Display Adapter, LED & Switch

Size: A5	Date: 2024-10-11	**Rev: 3.2**
KiCad E.D.A. 9.0.0		Id: 31/46

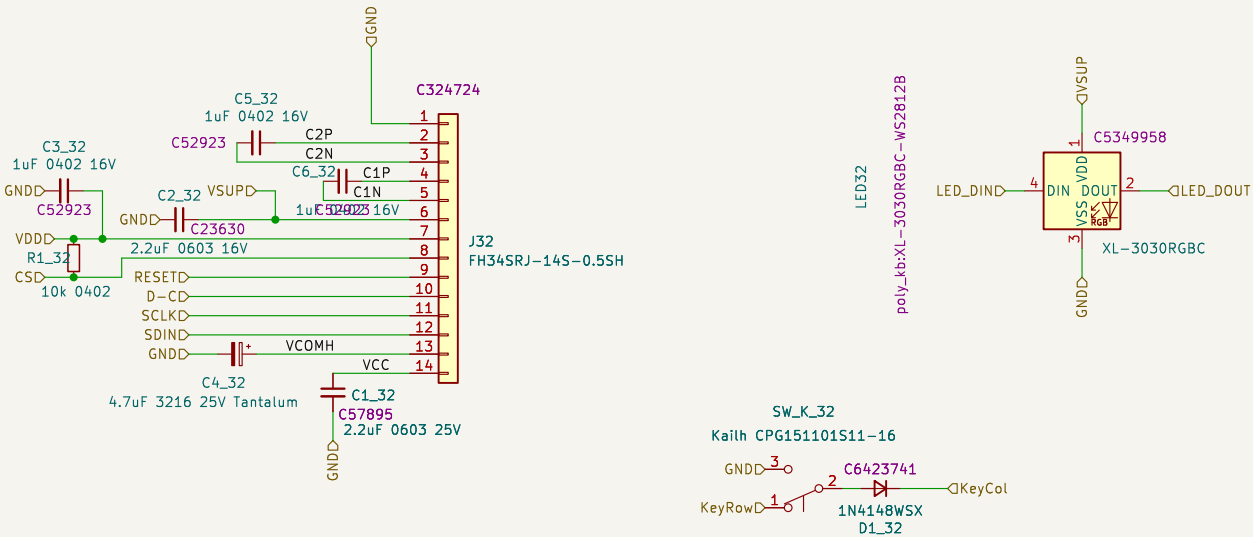

thpoll

Sheet: /K_B3/

File: SSD1306_TO_SPI.kicad_sch

Title: Display Adapter, LED & Switch

Size: A5	Date: 2024-10-11	**Rev: 3.2**
KiCad E.D.A. 9.0.0		Id: 32/46

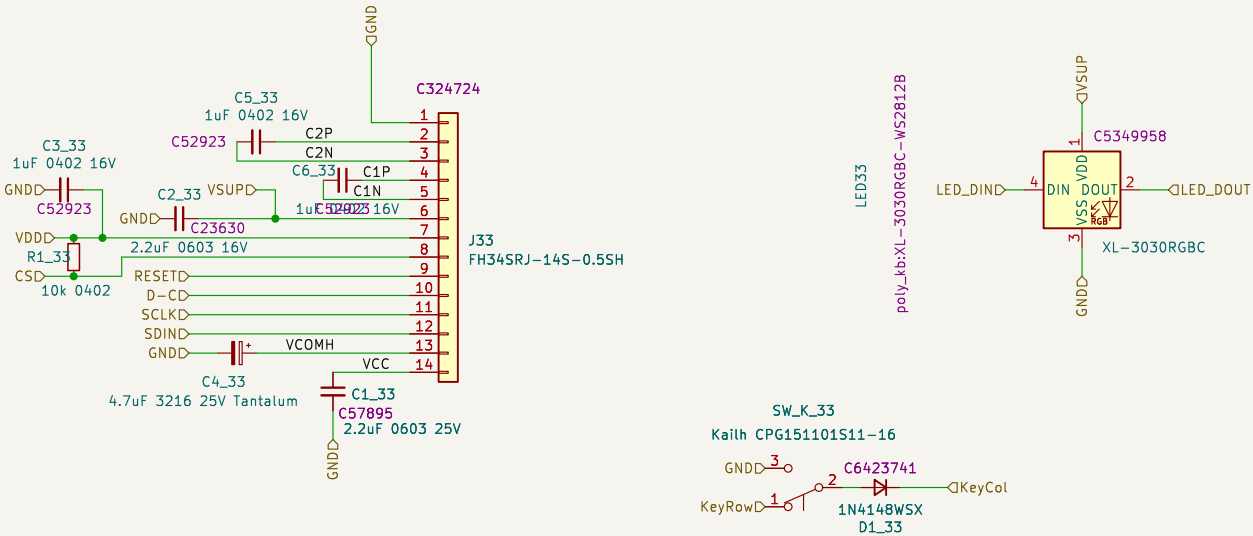

thpoll

Sheet: /K_B4/

File: SSD1306_TO_SPI.kicad_sch

Title: Display Adapter, LED & Switch

Size: A5	Date: 2024-10-11	**Rev: 3.2**
KiCad E.D.A. 9.0.0		Id: 33/46

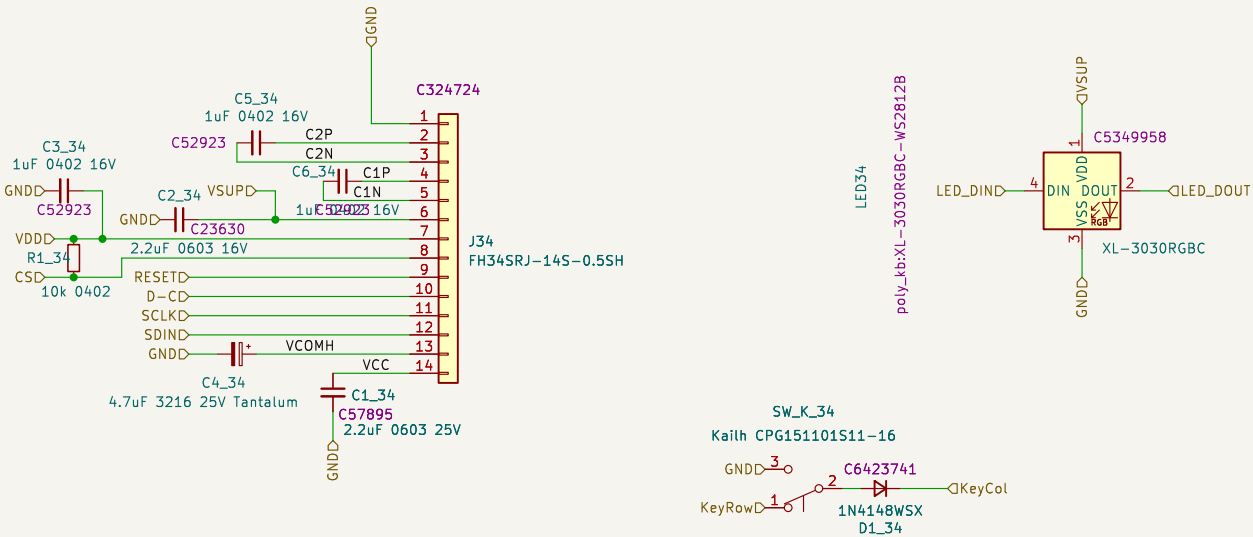

thpoll

Sheet: /K_B5/

File: SSD1306_TO_SPI.kicad_sch

Title: Display Adapter, LED & Switch

Size: A5	Date: 2024-10-11	**Rev: 3.2**
KiCad E.D.A. 9.0.0		Id: 34/46

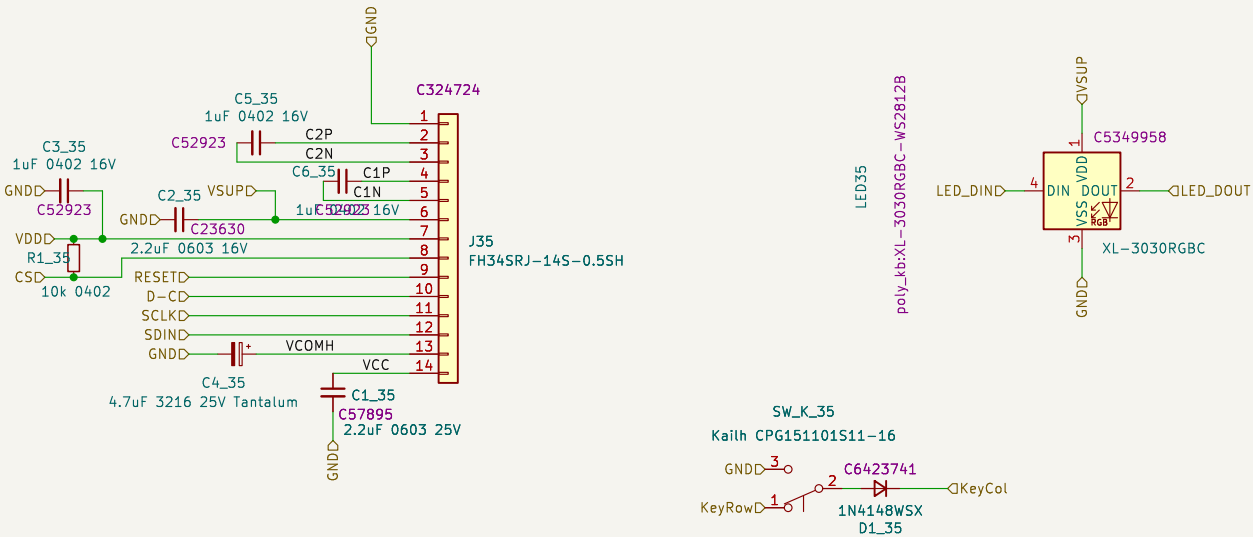

thpoll

Sheet: /K_B6/

File: SSD1306_TO_SPI.kicad_sch

Title: Display Adapter, LED & Switch

Size: A5	Date: 2024-10-11	**Rev: 3.2**
KiCad E.D.A. 9.0.0		Id: 35/46

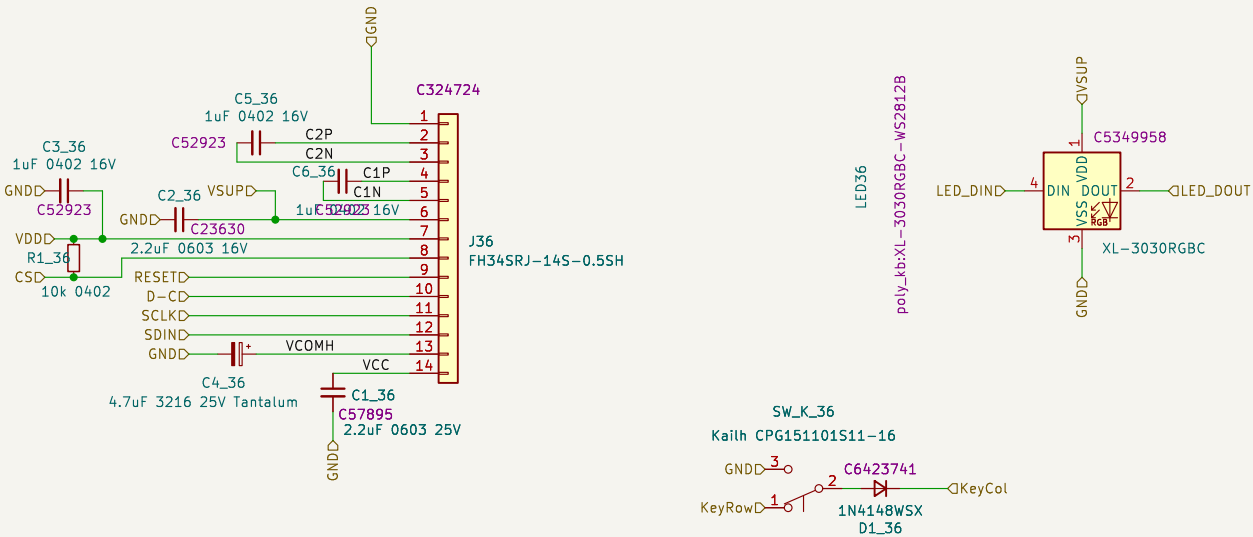

thpoll

Sheet: /K_B7/

File: SSD1306_TO_SPI.kicad_sch

Title: Display Adapter, LED & Switch

Size: A5	Date: 2024-10-11	**Rev: 3.2**
KiCad E.D.A. 9.0.0		Id: 36/46

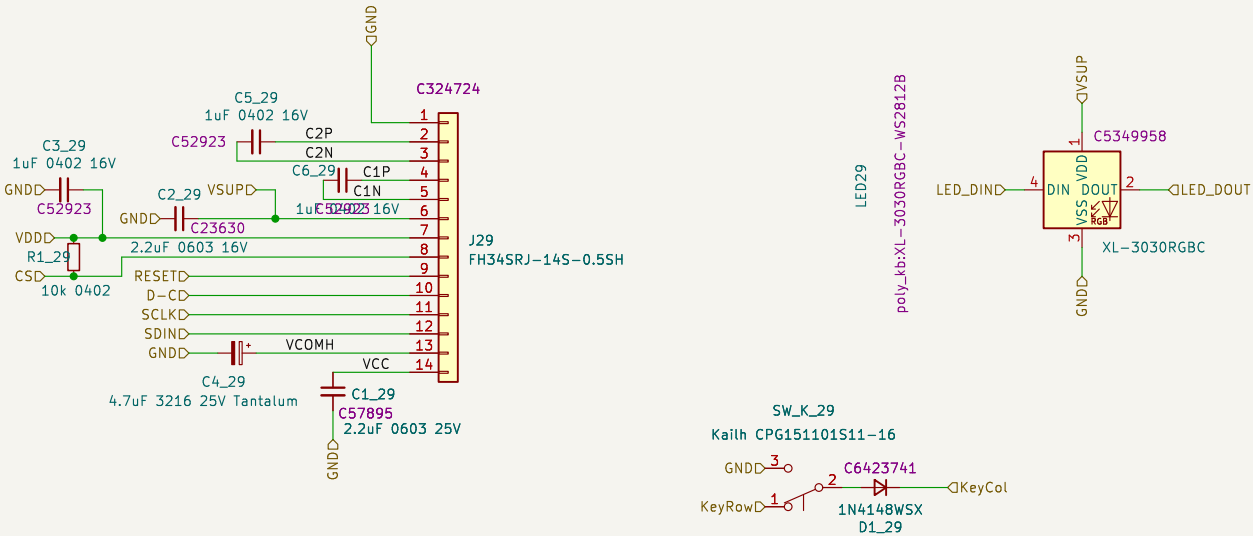

thpoll

Sheet: /K_B8/

File: SSD1306_TO_SPI.kicad_sch

Title: Display Adapter, LED & Switch

Size: A5	Date: 2024-10-11	**Rev: 3.2**
KiCad E.D.A. 9.0.0		Id: 37/46

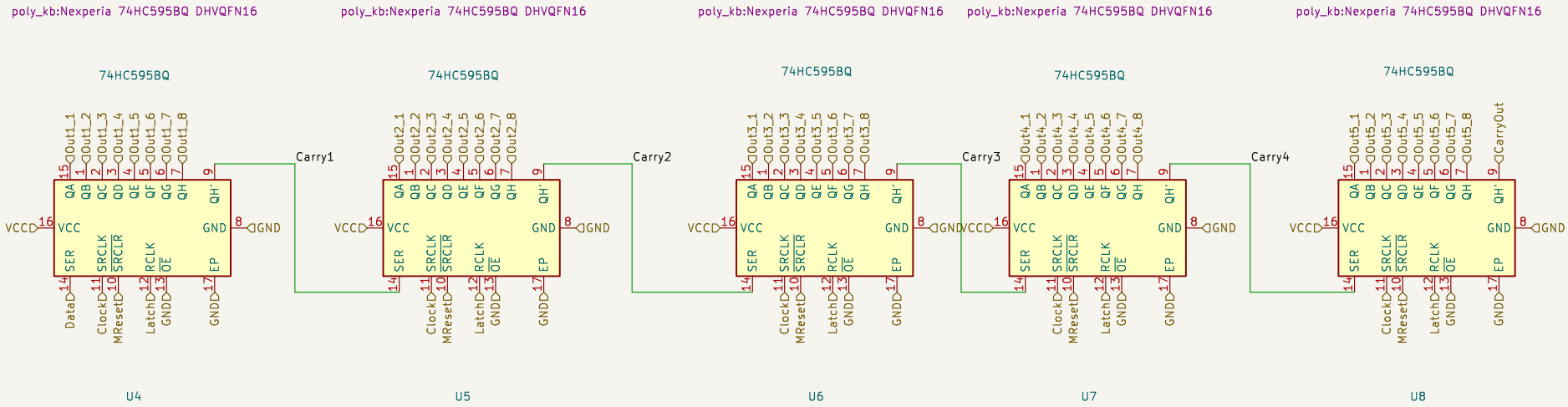

Sheet: /ShiftRegisters/
File: shift_registers.kicad_sch

Title: Shift Registers

Size: A4	Date: 2024-10-11	**Rev: 3.2**
KiCad E.D.A. 9.0.0		Id: 38/46

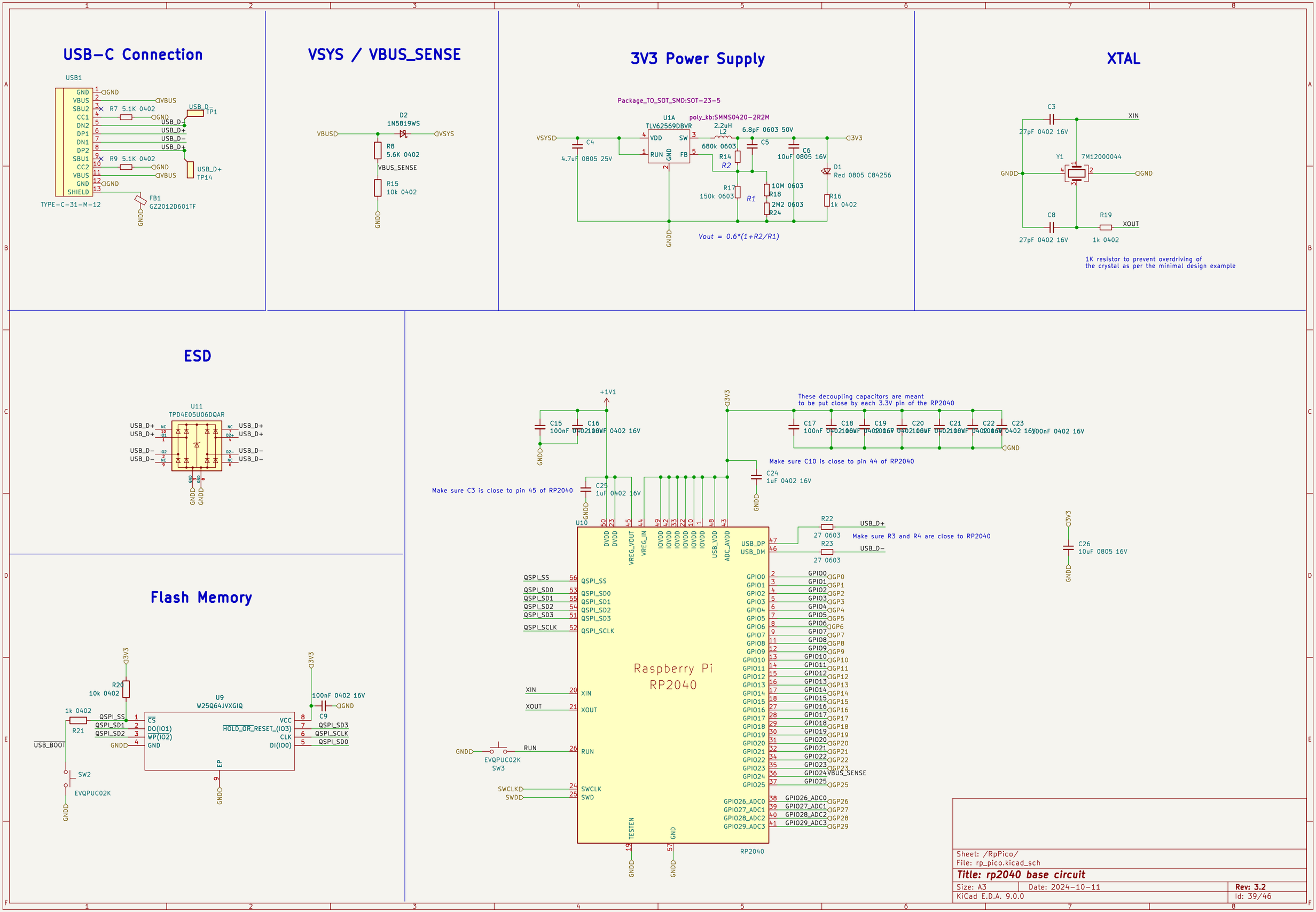
USB-C Connection
USB1
TYPE-C-31-M-12
R7 5.1K 0402
R9 5.1K 0402
USB_D-
USB_D+
TP1
TP14
FB1
GZ2012D601TF
VSYS / VBUS_SENSE
D2
1N5819WS
R8
5.6K 0402
VBUS_SENSE
R15
10k 0402
3V3 Power Supply
Package_TO_SOT_SMD:SOT-23-5
U1A
TLV62569DBVR
poly_kb:SMMS0420-2R2M
2.2uH
L2
6.8pF 0603 50V
680k 0603
4.7uF 0805 25V
10uF 0805 16V
D1
Red 0805 C84256
R16
1k 0402
R17
150k 0603
10M 0603
R18
2M2 0603
R24
Vout = 0.6*(1+R2/R1)
XTAL
27pF 0402 16V
Y1
7M12000044
R19
1k 0402
1K resistor to prevent overdriving of
the crystal as per the minimal design example
ESD
U11
TPD4E05U06DQAR
Flash Memory
U9
W25Q64JVXGIQ
R20
10k 0402
1k 0402
R21
SW2
EVQPUC02K
100nF 0402 16V
These decoupling capacitors are meant
to be put close by each 3.3V pin of the RP2040
Make sure C10 is close to pin 44 of RP2040
Make sure C3 is close to pin 45 of RP2040
C24
1uF 0402 16V
C25
1uF 0402 16V
C26
10uF 0805 16V
R22
27 0603
R23
27 0603
Make sure R3 and R4 are close to RP2040
U10
Raspberry Pi
RP2040
Sheet: /RpPico/
File: rp_pico.kicad_sch
Title: rp2040 base circuit
Size: A3
Date: 2024-10-11
Rev: 3.2
KiCad E.D.A. 9.0.0
Id: 39/46

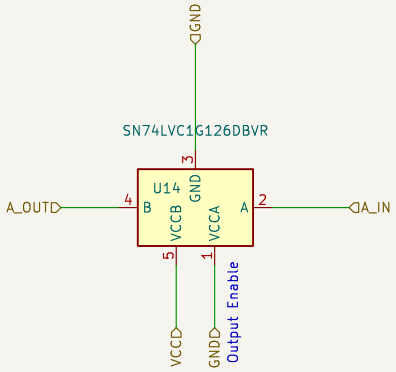

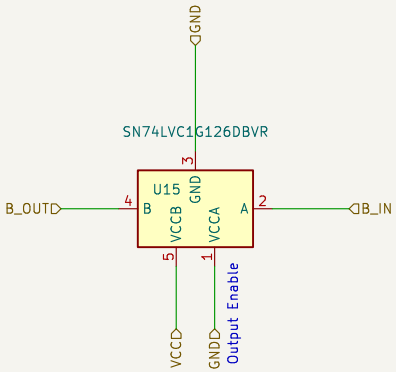

Sheet: /NonInvertingBuffer0/
File: ni_buffer2.kicad_sch

Title:

Size: A4	Date:	**Rev:**
KiCad E.D.A. 9.0.0		Id: 40/46

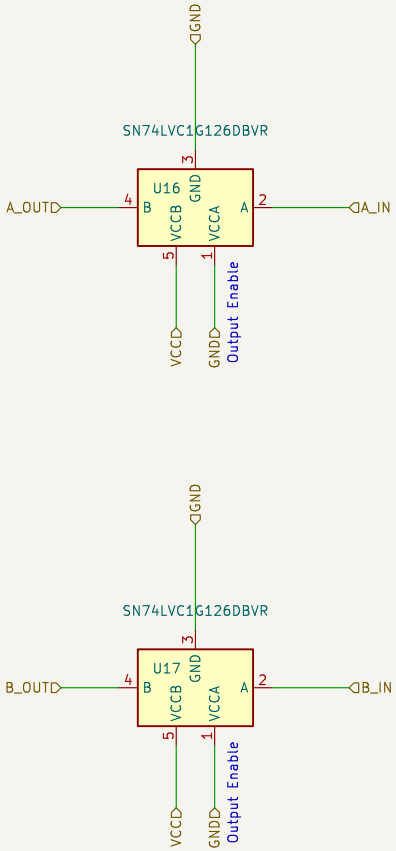

Sheet: /NonInvertingBuffer2/
File: ni_buffer2.kicad_sch

Title:

Size: A4	Date:	**Rev:**
KiCad E.D.A. 9.0.0		Id: 41/46

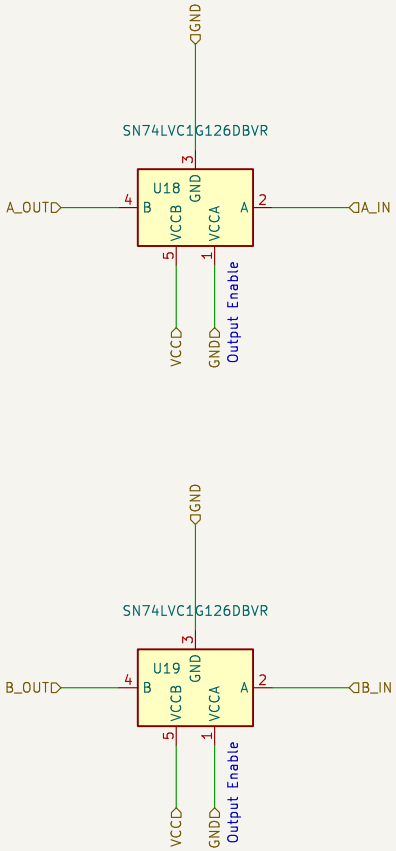

Sheet: /NonInvertingBuffer3/
File: ni_buffer2.kicad_sch

Title:

Size: A4	Date:	**Rev:**
KiCad E.D.A. 9.0.0		Id: 42/46

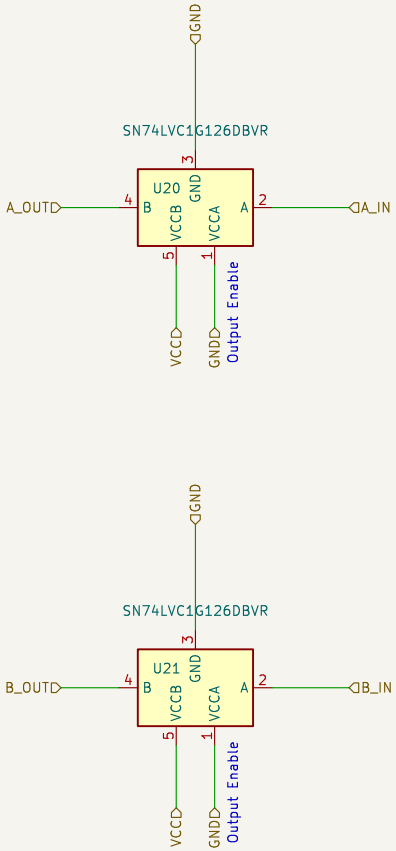

Sheet: /NonInvertingBuffer4/
File: ni_buffer2.kicad_sch

Title:

Size: A4	Date:	**Rev:**
KiCad E.D.A. 9.0.0		Id: 43/46

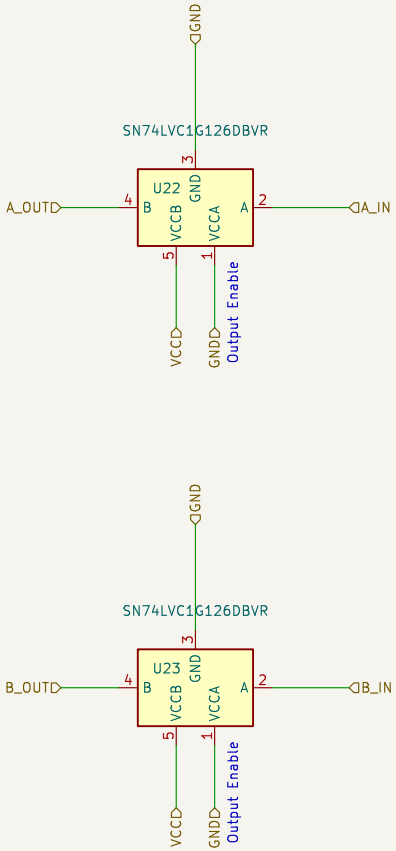

Sheet: /NonInvertingBuffer5/
File: ni_buffer2.kicad_sch

Title:

Size: A4	Date:	**Rev:**
KiCad E.D.A. 9.0.0		Id: 44/46

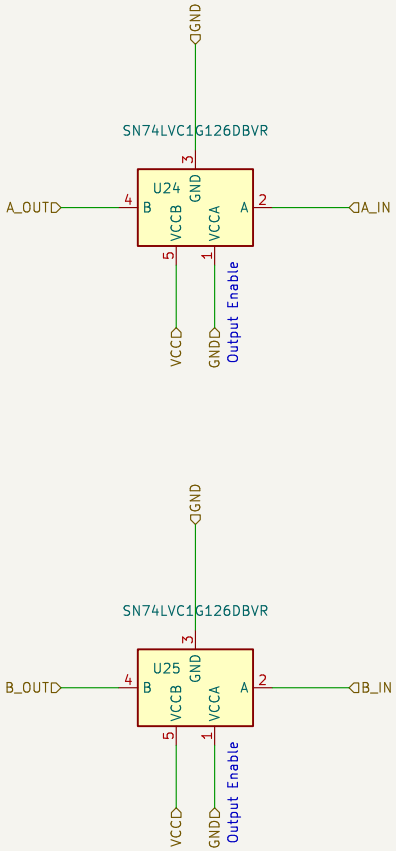

Sheet: /NonInvertingBuffer6/
File: ni_buffer2.kicad_sch

Title:

Size: A4	Date:	**Rev:**
KiCad E.D.A. 9.0.0		Id: 45/46