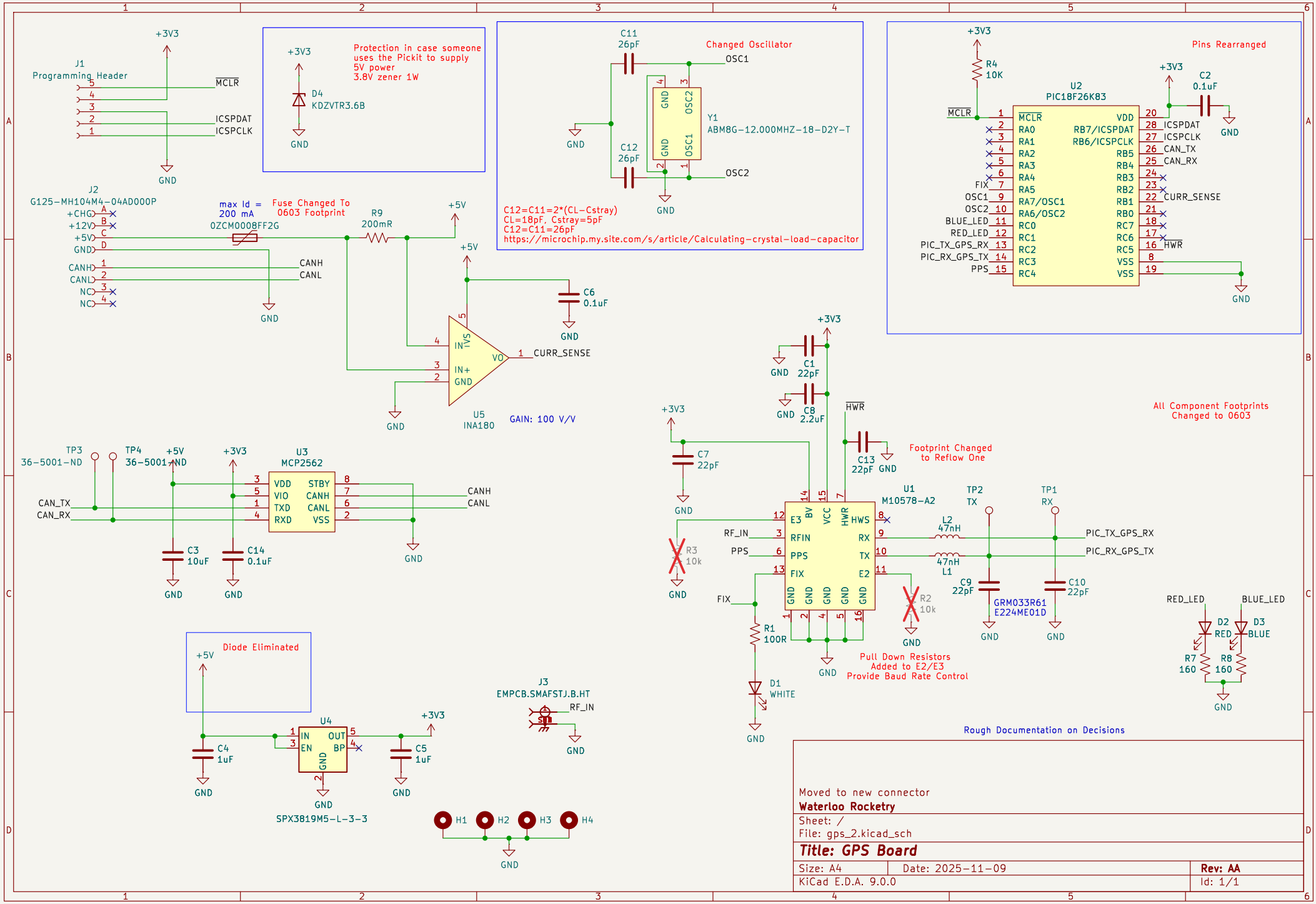
J1
Programming Header
MCLR
ICSPDAT
ICSPCLK
+3V3
GND
Protection in case someone uses the Pickit to supply 5V power
3.8V zener 1W
D4
KDZVTR3.6B
C11
26pF
C12
26pF
Changed Oscillator
OSC1
OSC2
Y1
ABM8G-12.000MHZ-18-D2Y-T
C12=C11=2*(CL-Cstray)
CL=18pF, Cstray=5pF
C12=C11=26pF
https://microchip.my.site.com/s/article/Calculating-crystal-load-capacitor
Pins Rearranged
R4
10K
U2
PIC18F26K83
C2
0.1uF
FIX
OSC1
OSC2
BLUE_LED
RED_LED
PIC_TX_GPS_RX
PIC_RX_GPS_TX
PPS
CURR_SENSE
HWR
J2
G125-MH104M4-04AD000P
+CHG
+12V
+5V
CANH
CANL
max Id = 200 mA
Fuse Changed To 0603 Footprint
0ZCM0008FF2G
R9
200mR
C6
0.1uF
U5
INA180
GAIN: 100 V/V
TP3
36-5001-ND
TP4
36-5001-ND
U3
MCP2562
VDD
VIO
TXD
RXD
STBY
CANH
CANL
VSS
CAN_TX
CAN_RX
C3
10uF
C14
0.1uF
C1
22pF
C8
2.2uF
C7
22pF
C13
22pF
Footprint Changed to Reflow One
All Component Footprints Changed to 0603
U1
M10578-A2
RF_IN
PPS
FIX
R3
10k
R2
10k
R1
100R
D1
WHITE
L2
47nH
L1
47nH
TP2
TX
TP1
RX
C9
22pF
C10
22pF
GRM033R61
E224ME01D
Pull Down Resistors Added to E2/E3 Provide Baud Rate Control
D2
RED
D3
BLUE
R7
160
R8
160
Diode Eliminated
C4
1uF
U4
IN
EN
OUT
BP
C5
1uF
SPX3819M5-L-3-3
J3
EMPCB.SMAFSTJ.B.HT
H1
H2
H3
H4
Rough Documentation on Decisions
Moved to new connector
Waterloo Rocketry
Sheet: /
File: gps_2.kicad_sch
Title: GPS Board
Size: A4
Date: 2025-11-09
Rev: AA
KiCad E.D.A. 9.0.0
Id: 1/1