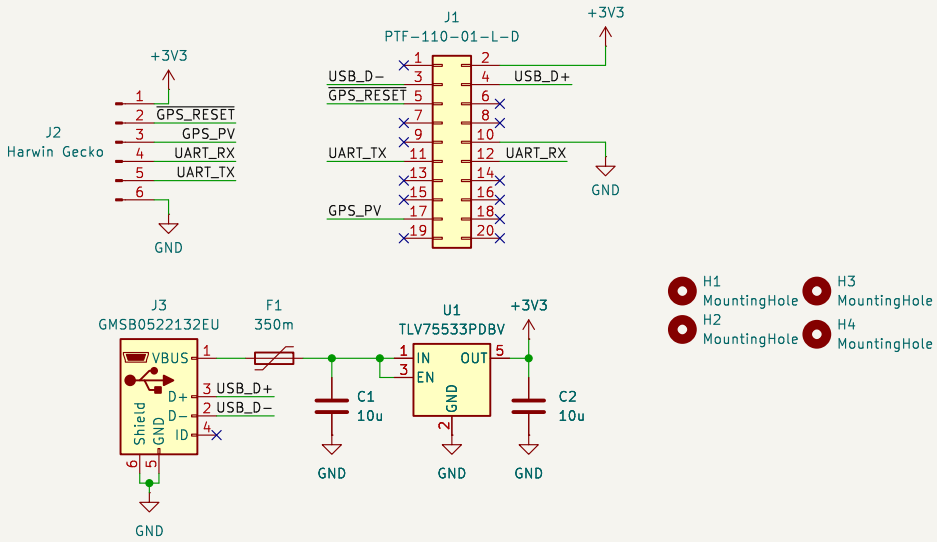

Waterloo Rocketry

Sheet: /

File: novatel_gps_breakout.kicad_sch

Title: Novatel GNSS Reciever Breakout Board

Size: A4	Date: 2025-05-13	**Rev: v0**
KiCad E.D.A. 9.0.0		Id: 1/1