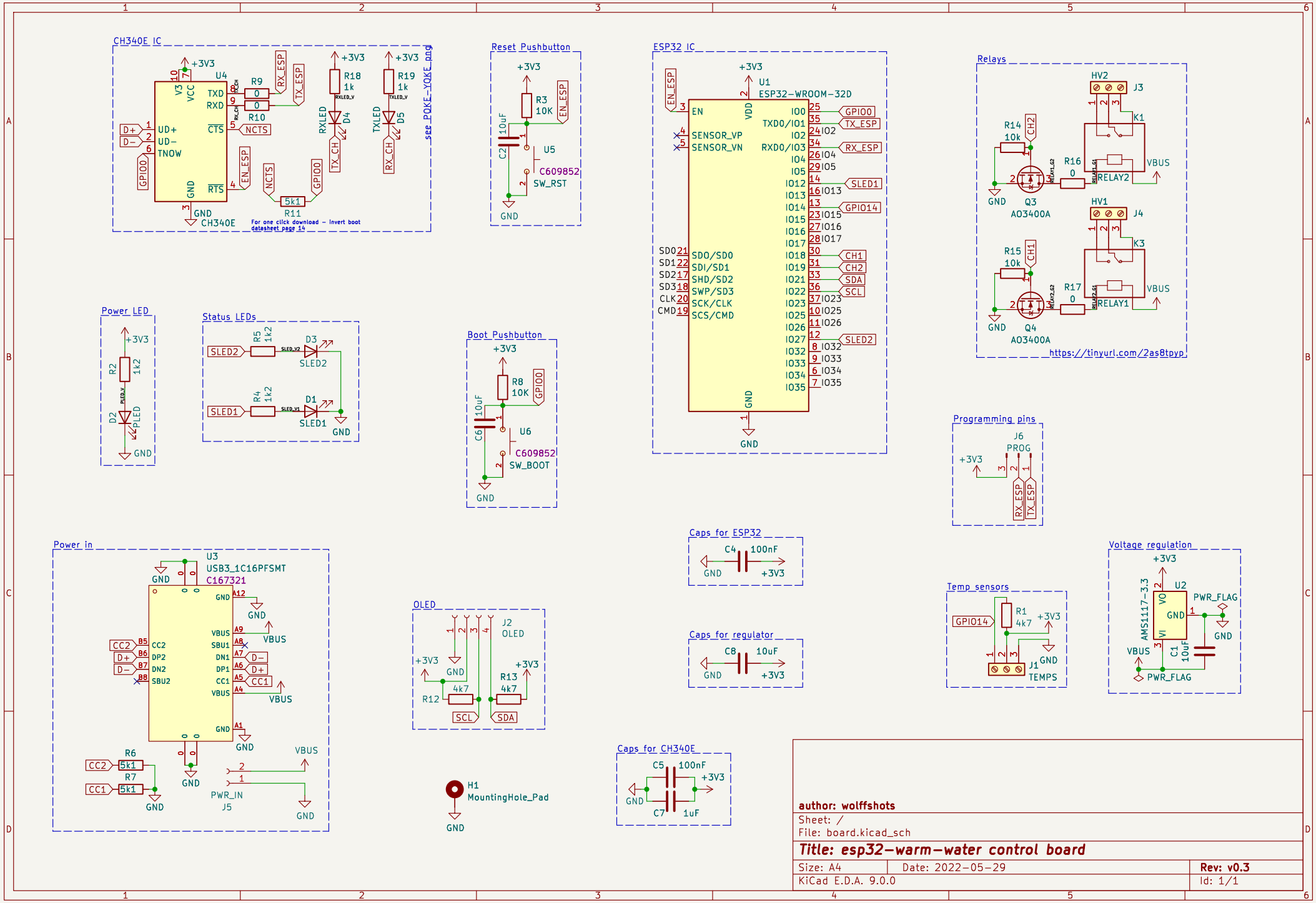
CH340E IC
U4
CH340E
R9 0
R10 0
R11 5k1
R18 1k
R19 1k
D4
D5
see POKE-YOKE.png
For one click download - invert boot datasheet page 14
Reset Pushbutton
R3 10K
C2 10uF
U5
C609852
SW_RST
ESP32 IC
U1
ESP32-WROOM-32D
Relays
HV2
J3
K1
RELAY2
R14 10k
R16 0
Q3
AO3400A
HV1
J4
K3
RELAY1
R15 10k
R17 0
Q4
AO3400A
https://tinyurl.com/2as8tpyp
Power LED
R2 1k2
D2
PLED
Status LEDs
R5 1k2
D3
SLED2
R4 1k2
D1
SLED1
Boot Pushbutton
R8 10K
C6 10uF
U6
C609852
SW_BOOT
Programming pins
J6
PROG
Power in
U3
USB3_1C16PFSMT
C167321
R6 5k1
R7 5k1
PWR_IN
J5
OLED
J2
OLED
R12 4k7
R13 4k7
Caps for ESP32
C4 100nF
Caps for regulator
C8 10uF
Caps for CH340E
C5 100nF
C7 1uF
H1
MountingHole_Pad
Temp sensors
R1 4k7
J1
TEMPS
Voltage regulation
U2
AMS1117-3.3
C1 10uF
PWR_FLAG
author: wolffshots
Sheet: /
File: board.kicad_sch
Title: esp32-warm-water control board
Size: A4
Date: 2022-05-29
Rev: v0.3
KiCad E.D.A. 9.0.0
Id: 1/1